MI3

Miniature Infrared Sensor

Operating Instructions

Raytek®
A Fluke Company

Rev. C1 03/2012
55201

Made in Germany Juli 2010
Model: **RAYMI310LTS**
Serial: **1070088**
Power Requirements: 8 bis 32 VDC, 4 W
IP 65

The device complies with the requirements of the European Directives.

EC – Directive 2004/108/EC (EMC)

Contacts

Raytek Corporation
Worldwide Headquarters
Santa Cruz, CA USA
Tel: +1 800 227 – 8074
(USA and Canada only)
+1 831 458 – 3900

solutions@raytek.com

European Headquarters
Berlin, Germany
Tel: +49 30 4 78 00 80

raytek@raytek.de

France

info@raytek.fr

United Kingdom

ukinfo@raytek.com

Fluke Service Center
Beijing, China
Tel: +86 10 6438 4691

info@raytek.com.cn

Internet: http://www.raytek.com/

Thank you for purchasing this Raytek product. Register today at www.raytek.com/register to receive the latest updates, enhancements and software upgrades!

WARRANTY

The manufacturer warrants this product to be free from defects in material and workmanship under normal use and service for the period of one year from date of purchase, except as hereinafter provided. This warranty extends only to the original purchaser (a purchase from Raytek or a licensed distributor of Raytek is an original purchase). This warranty shall not apply to fuses, batteries, or any product which has been subject to misuse, neglect, accident, or abnormal conditions of operation.

In the event of failure of a product covered by this warranty, the manufacturer will repair the instrument when it is returned by the purchaser, freight prepaid, to an authorized Service Facility within the applicable warranty period, provided manufacturer's examination discloses to its satisfaction that the product was defective. The manufacturer may, at its option, replace the product in lieu of repair. With regard to any covered product returned within the applicable warranty period, repairs or replacement will be made without charge and with return freight paid by the manufacturer, unless the failure was caused by misuse, neglect, accident, or abnormal conditions of operation or storage, in which case repairs will be billed at a reasonable cost. In such a case, an estimate will be submitted before work is started, if requested.

THE FOREGOING WARRANTY IS IN LIEU OF ALL OTHER WARRANTIES, EXPRESSED OR IMPLIED, INCLUDING BUT NOT LIMITED TO ANY IMPLIED WARRANTY OF MERCHANTABILITY, FITNESS, OR ADEQUACY FOR ANY PARTICULAR PURPOSE OR USE. THE MANUFACTURER SHALL NOT BE LIABLE FOR ANY SPECIAL, INCIDENTAL OR CONSEQUENTIAL DAMAGES, WHETHER IN CONTRACT, TORT, OR OTHERWISE.

TABLE OF CONTENTS

1 Safety Instructions

This document contains important information, which should be kept at all times with the instrument during its operational life. Other users of this instrument should be given these instructions with the instrument. Eventual updates to this information must be added to the original document. The instrument should only be operated by trained personnel in accordance with these instructions and local safety regulations.

Acceptable Operation

This instrument is intended only for the measurement of temperature. The instrument is appropriate for continuous use. The instrument operates reliably in demanding conditions, such as in high environmental temperatures, as long as the documented technical specifications for all instrument components are adhered to. Compliance with the operating instructions is necessary to ensure the expected results.

Unacceptable Operation

The instrument should not be used for medical diagnosis.

Replacement Parts and Accessories

Use only original parts and accessories approved by the manufacturer. The use of other products can compromise the operational safety and functionality of the instrument.

Instrument Disposal

Disposal of old instruments should be handled according to professional and environmental regulations as electronic waste.

Operating Instructions

The following symbols are used to highlight essential safety information in the operation instructions:

Helpful information regarding the optimal use of the instrument.

Warnings concerning operation to avoid instrument damage and personal injury.

The instrument can be equipped with a Class 2 laser. Class 2 lasers shine only within the visible spectrum at an intensity of 1 mW. Looking directly into the laser beam can produce a slight, temporary blinding effect, but does not result in physical injury or damage to the eyes, even when the beam is magnified by optical aids. At any rate, closing the eye lids is encouraged when eye contact is made with the laser beam. Pay attention to possible reflections of the laser beam. The laser functions only to locate and mark surface measurement targets. Do not aim the laser at people or animals.

Pay particular attention to the following safety instructions.

Use in 110/230 VAC electrical systems can result in electrical hazards and personal injury, if not properly protected. All instrument parts supplied by electricity must be covered to prevent physical contact and other hazards at all times.

2 Description

The MI3 sensor series is the next generation of the well-established "MI class" sensor platform. It will be capable of covering a broad range of applications. The MI3 sensor series introduces various network communications, an externally accessible user interface, improved temperature measurement specifications and capabilities at an economic price.

The MI3 series comes with the following highlights:

- Rugged sensing heads survive ambient temperatures to 120°C (248°F) including optimized performance due to ambient temperature calibration across full ambient temperature range
- Multi head system architecture to allow multiple sensing heads to be multiplexed from a single communication box
- Stand-alone OEM sensing head operation
- Precision high resolution optics up to 100:1
- Up to 10 ms response time
- Alarm status indicator
- Standard USB 2.0 digital interface
- User configurable analog outputs
- Alarm relay output
- Optional field buses Profibus and Modbus®[1]
- Automatic sensing head identification
- Includes DataTemp® Multidrop software for sensor configuration and monitoring
- Field calibration software

[1] Modbus is a registered trademark of Modbus Organization, Inc.

2.1.1 Overview Comm Boxes

	MI3COMM metal box	MI3MCOMMN DIN 3TE	MI3MCOMM DIN 4TE	MI3MCOMM… DIN 6TE
				
Part number	MI3COMM…	MI3MCOMMN	MI3MCOMM	MI3MCOMM…
Spectral Heads[1]	LT,G5,1M,2M	LT,G5,1M,2M	LT,G5,1M,2M	LT,G5,1M,2M
Head Support				
by firmware	8 heads	4 heads	4 heads	4 heads
by terminal	1 head	4 heads	4 heads	4 heads
Control panel				
Display	✓	–	✓	✓
Buttons	✓	–	✓	✓
Outputs				
mA/V	1	–	–	–
TC	1	–	–	–
Relay	1	1	1	1
Inputs	FTC1–3	FTC3	FTC3	FTC3
Communication				
USB	Standard	Standard	Standard	Standard
RS485	Option (…4)	–	Standard	–
Profibus	Option (P1,P2)	–	–	Option (…P)
Modbus	Option (…M)	–	–	Option (…M)

Table 1: Capabilities of Communication Boxes

[1] 1M, 2M spectral heads require box firmware revision 2.11 or higher

3 Technical Data

3.1 Measurement Specification

Temperature Range

LT02, LT10	-40 to 600°C (-40 to 1112°F)
LT20, LTF	0 to 1000°C (32 to 1832°F)
G5	250 to 1650°C (482 to 3002°F)
1M	500 to 1800°C (932 to 3272°F)
2M	250 to 1400°C (482 to 2552°F)

Spectral Response

LT	8 to 14 µm
G5	5 µm
1M	1 µm
2M	1.6 µm

Optical Resolution D:S[1]

LTS	2:1, 10:1, 22:1 typ. (21:1 guaranteed)
LTF	10:1
G5	22:1 typ. (21:1 guaranteed)
1M, 2M	100:1 SF1 optics: 2 mm spot @ 200 mm distance (0.08 in @ 7.9 in) SF3 optics: 22 mm spot @ 2200 mm distance (0.87 in @ (8.7 in)

Response Time[2]

LTS (standard)	130 ms
LTF (fast)	20 ms
G5	55 ms

[1] at 90% energy in minimum and distance 400 mm (15.7 in.)
[2] 90% response

1M, 2M	10 ms

System Accuracy[1]

LT, G5

digital interface	± (1% of reading or 1°C), whichever is greater ± 2°C (± 4°F) for target temp. < 20°C (68°F)
mA/V output	± (1% of reading or 1°C) ± 1°C ± 2°C (± 4°F) for target temp. < 20°C (68°F)
TC output	± (1% of reading or 1°C) ± 1.5°C

1M, 2M

digital interface	± (0.5% + 2°C)
mA/V output	± (0.5% + 2°C) ± 1°C
TC output	± (0.5% + 2°C) ± 1.5°C

Repeatability

LT, G5	± 0.5% of reading or ± 0.5°C whichever is greater
1M, 2M	± 0.25% + 1°C

Temperature Resolution[2]

mA/V Output	± 0.1°C (± 0.2°F)

Emissivity

All models	0.100 to 1.100

Transmission

All models	0.100 to 1.000

Temperature Coefficient

LT, G5	± 0.05 K / K or ± 0.05% / K of reading whichever is greater
1M, 2M	0.01% / K of reading

[1] at ambient temperature 23°C ±5°C (73°F ±9°F), ε = 1.0, and calibration geometry
[2] for a zoomed temperature span of < 500°C (932°F)

mA/V Output	0 K
TC Output	± 0.05 K / K

3.2 Optical Charts

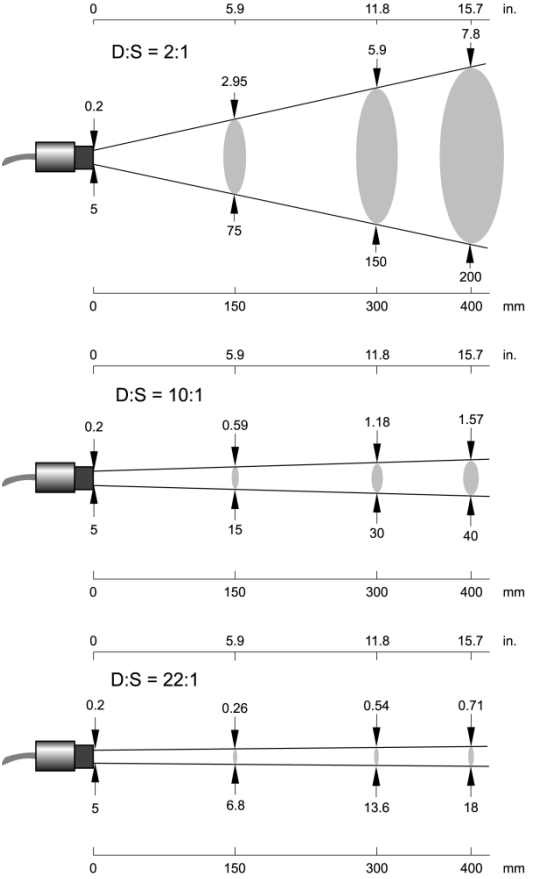

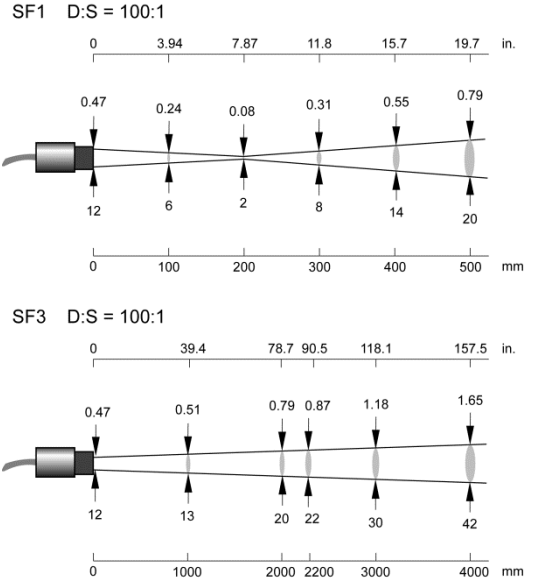

Figure 1: Spot Size Charts

3.3 Electrical Specification

Power Supply (Box) 8 to 32 VDC, max. 4 W

Analog Outputs

Output 1	0 to 5/10 V output for head ambient temperature and object temperature electrically **not** isolated from power supply
TC	Thermocouple (type J, K, R, or S)
Output 2	0 to 20 mA (active), or 4 to 20 mA (active), or 0 to 5 V, or 0 to 10 V electrically **not** isolated from power supply

Alarm Output

1 potential-free relay output, 48 V / 300 mA
Relay with wear-free contacts (solid state relay)
for target temperature or head ambient temperature,
electrically isolated from power supply

External Inputs

3 inputs are available useable in different modes:

FTC1-3	Emissivity control: 3 bit digital coded, 0 to V_{SS}
FTC1	Emissivity control: analog, 0 to 5 V_{DC}
FTC2	Ambient temperature compensation: analog, 0 to 5 V_{DC}
FTC3	for trigger/hold/laser functions, 0 to V_{SS}

USB Interface

Version: 2.0
Connector on the board: type Mini-B

3.4 Environmental Specification

3.4.1 Sensing Head

Ambient Temperature	
LT, G5	-10 to 120°C (14 to 248°F)
1M, 2M	0 to 120°C (32 to 248°F)
Laser (1M, 2M)	automatic switch off at 65°C (149°F)
Storage Temperature	-20 to 120°C (-4 to 248°F)
Rating	IP65 (NEMA-4) / IEC 60529
Relative Humidity	10% to 95% non-condensing
EMC	EN 61326-1:2006
Vibration	11 to 200 Hz, 3 g above 25 Hz operating, 3 axes / IEC 60068-2-6
Shock	50 g, 11 ms, operating, 3 axes / IEC 60068-2-27
Weight	
LT, G5	50 g (1.8 oz)
1M, 2M	233 g (8.2 oz)
Material	
Head	Stainless steel
Head Cable	PUR (Polyurethane), Halogen free, Silicone free

3.4.2 Comm Box (metal)

Ambient Temperature	-10 to 65°C (14 to 149°F)
Storage Temperature	-20 to 85°C (-4 to 185°F)
Rating	IP65 (NEMA-4) / IEC 60529
Relative Humidity	10% to 95% non-condensing
EMC	EN 61326-1:2006
Vibration	11 to 200 Hz, 3 g above 25 Hz operating, 3 axes / IEC 60068-2-6
Shock	50 g, 11 ms, operating, 3 axes / IEC 60068-2-27
Weight	370 g (13 oz)
Material	die-cast zinc enclosure

3.4.3 Comm Box (DIN)

Ambient Temperature	-10 to 65°C (14 to 149°F)
Storage Temperature	-20 to 85°C (-4 to 185°F)
Relative Humidity	10% to 95% non-condensing
EMC	EN 61326-1:2006
Vibration	11 to 200 Hz, 3 g above 25 Hz operating, 3 axes / IEC 60068-2-6
Shock	50 g, 11 ms, operating, 3 axes / IEC 60068-2-27
Weight	125 g (4.4 oz)
Material	molded plastic

3.5 Dimensions

3.5.1 Sensing Heads LT, G5

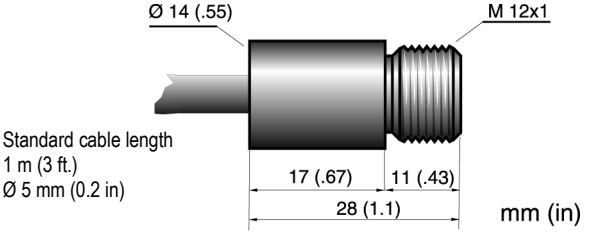

Figure 2: Dimensions of LT, G5 Sensing Heads

3.5.2 Sensing Heads 1M, 2M

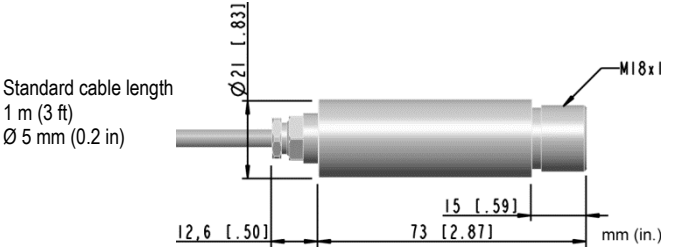

Figure 3: Dimensions of 1M, 2M Sensing Heads

3.5.3 Comm Box (metal)

The box is equipped with three cable feed-through ports – two with IP65 compatible sealing glands and one plugged expansion feed-through port with M12x1.5 thread.

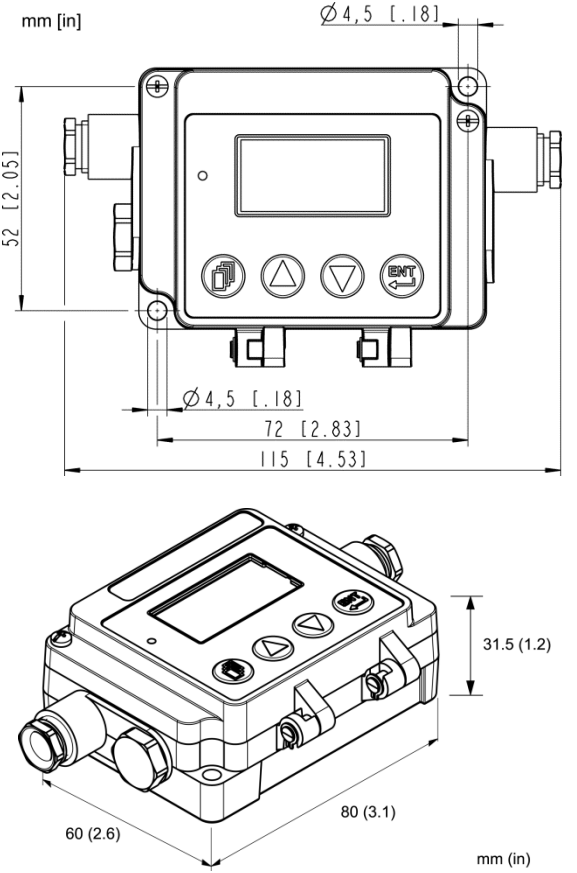

Figure 4: Dimensions of Communication Box

3.5.4 Comm Box (DIN)

The boxes come in a standard DIN rail size in accordance to EN 50022-35x7.5 (DIN 43880).

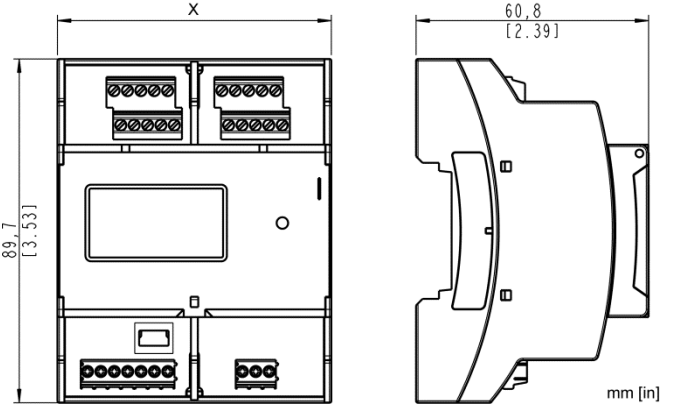

Width	MI3MCOMMN	MI3MCOMM	MI3MCOMM…
X	DIN 3TE: 53.6 mm (2.1 in)	DIN 4TE: 71.6 mm (2.8 in)	DIN 6TE: 107.6 mm (4.2 in)

Figure 5: Dimensions for Comm Boxes (DIN)

3.6 Scope of Delivery

3.6.1 Sensing Head

- Sensing head with 1 m (3 ft.) cable
- Laser (1M, 2M heads only)
- Mounting nut

3.6.2 Comm Box

- Communication box
- Software DVD
- Quickstart guide

4 Basics

4.1 Measurement of Infrared Temperature

All surfaces emit infrared radiation. The intensity of this infrared radiation changes according to the temperature of the object. Depending on the material and surface properties, the emitted radiation lies in a wavelength spectrum of approximately 1 to 20 µm. The intensity of the infrared radiation (heat radiation) is dependent on the material. For many substances, this material-dependent constant is known. This constant is referred to as the ”emissivity value”.

Infrared thermometers are optical-electronic sensors. These sensors are sensitive to the emitted radiation. Infrared thermometers are made up of a lens, a spectral filter, a sensor, and an electronic signal processing unit. The task of the spectral filter is to select the wavelength spectrum of interest. The sensor converts the infrared radiation into an electrical signal. The signal processing electronics analyze the electrical signal and convert it into a temperature measurement. As the intensity of the emitted infrared radiation is dependent on the material, the required emissivity can be selected on the sensor.

The biggest advantage of the infrared thermometer is its ability to measure temperature without touching an object. Consequently, surface temperatures of moving or hard to reach objects can easily be measured.

4.2 Emissivity of Target Object

To determine the emissivity of the target object see section 15.1 Determination of Emissivity, page 143. If emissivity is low, measured results could be falsified by interfering infrared radiation from background objects (such as heating systems, flames, fireclay bricks, etc. located close beside or behind the target object). This type of problem can occur when measuring reflective surfaces and very thin materials, such as plastic film and glass.
This measurement error can be reduced to a minimum, if particular care is taken during installation and the sensing head is shielded from these reflecting radiation sources.

4.3 Ambient Temperature

The sensing head is suited for the ambient temperatures up to 120°C (248°F). The sensing head can operate in ambient temperatures up to 200°C (392°F) with the air-cooling accessory.

4.4 Atmospheric Quality

If the lens gets dirty, infrared energy will be blocked and the instrument will not measure accurately. It is good practice to always keep the lens clean. The Air Purge Jacket helps keep contaminants from building up on the lens. If you use air purging, make sure a filtered air supply with clean dry air at the correct air pressure is installed before proceeding with the sensor installation.

4.5 Electrical Interference

To minimize electrical or electromagnetic interference or “noise”, please be aware of the following:

- Mount the unit as far away as possible from potential sources of electrical interference, such as motorized equipment, which can produce large step load changes.
- Use shielded wire for all input and output connections.
- To avoid current equalizations, make sure that a sufficient potential equalization is realized between the sensing head and metal housing of the communication box.
- To avoid ground loops, make sure that only **one point** is earth grounded, either via the sensing head, the Comm Box, or power.

Please note that:

- The metal housings of the sensing head and the MI3 communication box are electrically connected to the shield of the head cable.
- All inputs and outputs (except the alarm output) use the same ground and are electrically connected to the power supply.

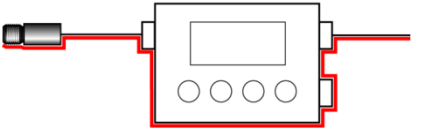

Figure 6: Shield Run for Comm Box (metal)

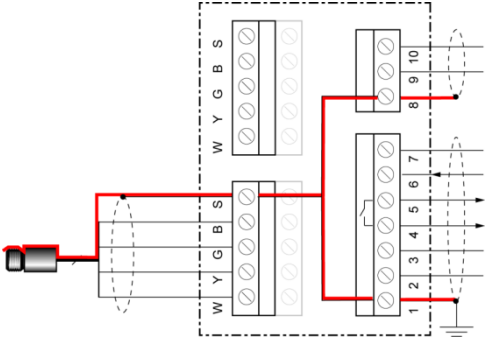

Figure 7: Shield Run for Comm Box (DIN)

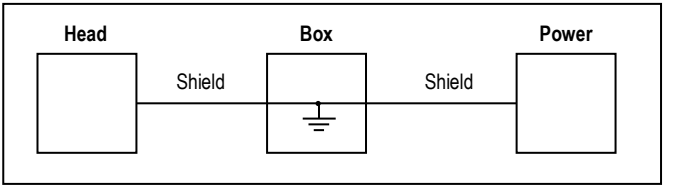

Figure 8: Only one point is earth grounded either via sensing head, via Comm Box, or via Power

5 Installation

5.1 Positioning

Sensor location depends on the application. Before deciding on a location, you need to be aware of the ambient temperature of the location, the atmospheric quality of the location, and the possible electromagnetic interference in that location. If you plan to use air purging, you need to have an air connection available. Wiring and conduit runs must be considered, including computer wiring and connections, if used.

5.1.1 Distance to Object

The desired spot size on the target will determine the maximum measurement distance. To avoid erroneous readings, the target spot size must completely fill the entire field of view of the sensor. Consequently, the sensor must be positioned so the field of view is the same as or smaller than the desired target size. For a list indicating the available optics, see section 3.2 Optical Charts, page 19.

The actual spot size for any distance can be calculated by using the following formula. Divide the distance D by your model's D:S number. For example, for a unit with D:S = 10:1, if the sensor is 400 mm (15.7 in.) from the target, divide 400 by 10 (15.7 by 10), which gives you a target spot size of approximately 40 mm (1.57 in.).

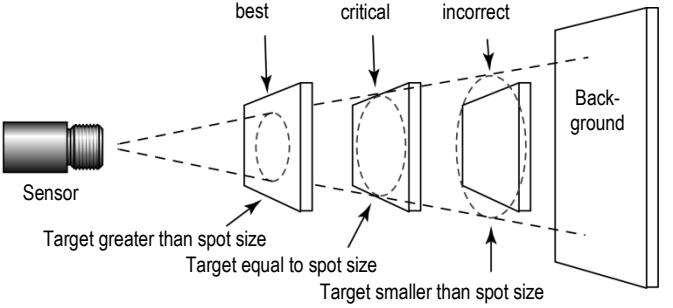

Figure 9: Proper Sensor Placement

5.2 Installation Schemes

5.2.1 Comm Box (metal)

The basic stand-alone configuration consists of one sensing head interfaced to one metallic communications box. The sensing head provides all IR measurement functionality. The communications box provides an externally accessibly user interface and display, advanced signal processing capability, field wiring terminations and fieldbus functionality with optional RS485 communication interface.

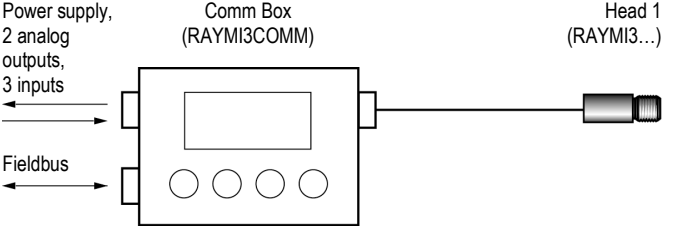

Figure 10: Single Head Configuration with Comm Box

To increase the number of supported sensing heads, you can use a dedicated accessory, see section 11.1.1 Multi-Channel Box, page 81.

5.2.2 Comm Box (DIN)

The multiple sensing head configuration consists of a modular communication box provided in a DIN rail mountable plastic enclosure for supporting 4 sensing heads simultaneously. The DIN rail communication box provides an externally accessibly user interface. The terminal strip connectors are used to simplify the field wiring.

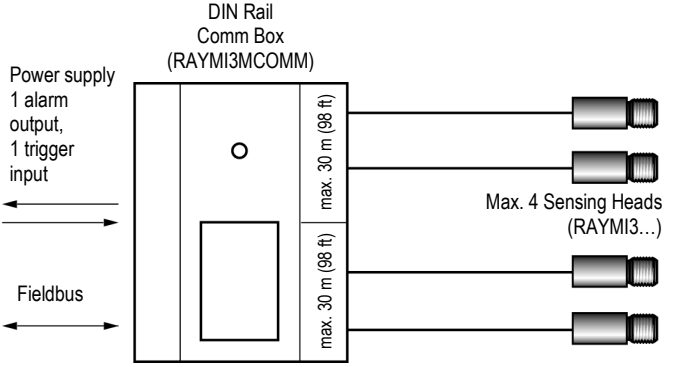

Figure 11: Multiple Head Configuration with DIN Rail Comm Box

5.3 Wiring, Head Cable

The user has to install the sensor cable on the communication box. It may be shortened, if necessary, but keep a minimal length of 20 cm (7.9 in).

Do not bend the sensing head cable tighter than a radius of 25 mm (1 in.)!

The total sensing head cable length for all networked sensing heads must not exceed 30 m/98 ft (for MI3) and 2x30 m/2x98 ft (for MI3M)!

Do not add a third party cable to extend the length of the sensing head cable!

5.3.1 Comm Box (metal)

1. Cut about 40 mm (1.5 in) of the cable sheath from the end of the sensing head cable ⑦. Caution: Do not cut into the shield!
2. Cut the shield ⑤ so about 5 mm (0.2 in) remains exposed from under the cable sheath. Separate the shield and spread the strands out.
3. Strip 3 mm (0.12 in) of insulation from the wires ⑥!
4. Open the communication box by removing the four Phillips head screws and pulling off the lid. Unscrew the pressure screw ①, and remove the first metal washer ④, the rubber washer ③, and the second and the third metal washers ④.
5. Put the following on the cable: the pressure screw ①, the first metal washer ④, the rubber washer ③ and the second metal washers ④, see the following figure.
6. Spread the cable shield ⑤ and then slip the third metal washer ④ onto the cable. Note that the shield must make good contact to both metal washers.
7. Slip the wires ⑥ into the communication box far enough to connect to the terminal.

8. Screw the pressure screw ① into the communication box. Tighten snuggly. Do not over tighten.
9. Connect the wires ⑥ to the terminal on the printed circuit board.

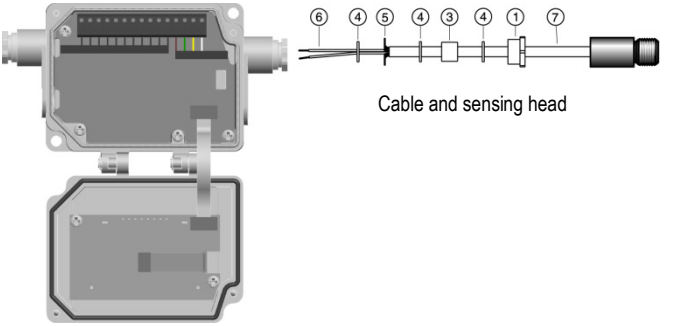

Figure 12: Sensing Head Cable to the Comm Box

5.3.2 Comm Box (DIN)

The wiring of the sensing head cable is color coded, see section 5.4.3 Comm Box (DIN 4 TE), page 39.

5.4 Wiring, Terminal

You need to connect the power supply and possibly the signal input/output wires. Use only cable with outside diameter from 4 to 6 mm (0.16 to 0.24 in), wire size: 0.14 to 0.75 mm² (AWG 19 to 26).

The cable must include shielded wires. It should not be used as a strain relief!

5.4.1 Comm Box (metal)

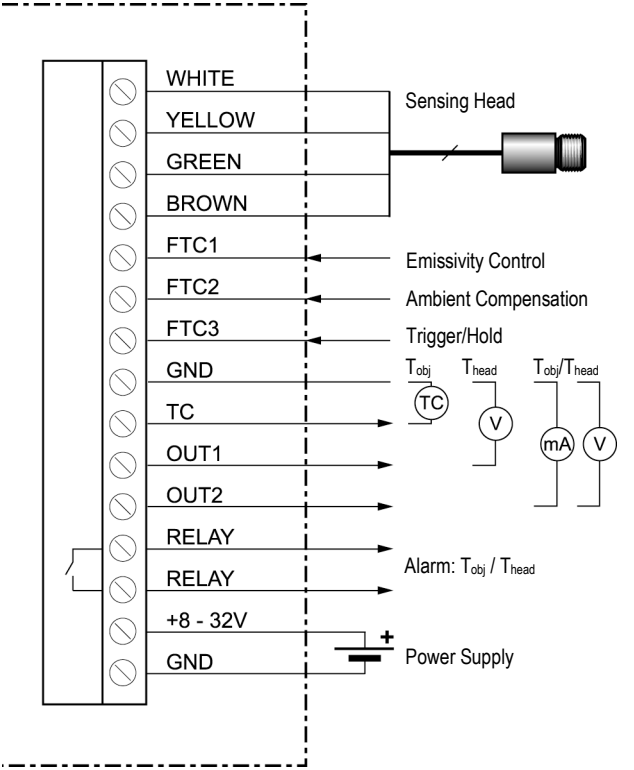

Figure 13: Terminal Wiring for the Comm Box

5.4.2 Comm Box (DIN 3TE)

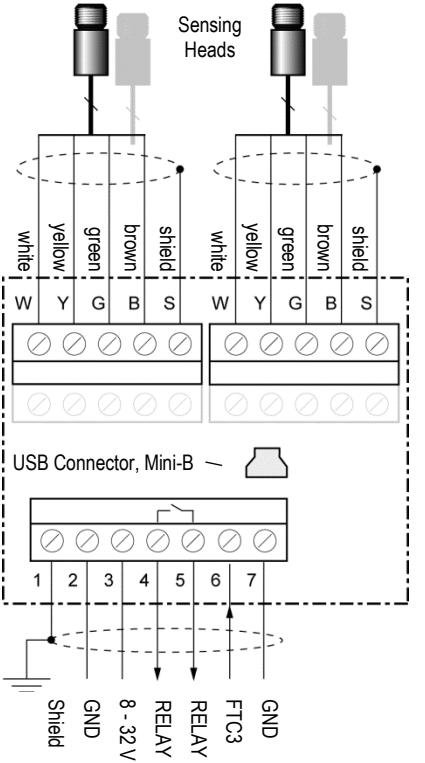

Figure 14: Terminal Wiring for the Comm Box DIN 3TE

5.4.3 Comm Box (DIN 4 TE)

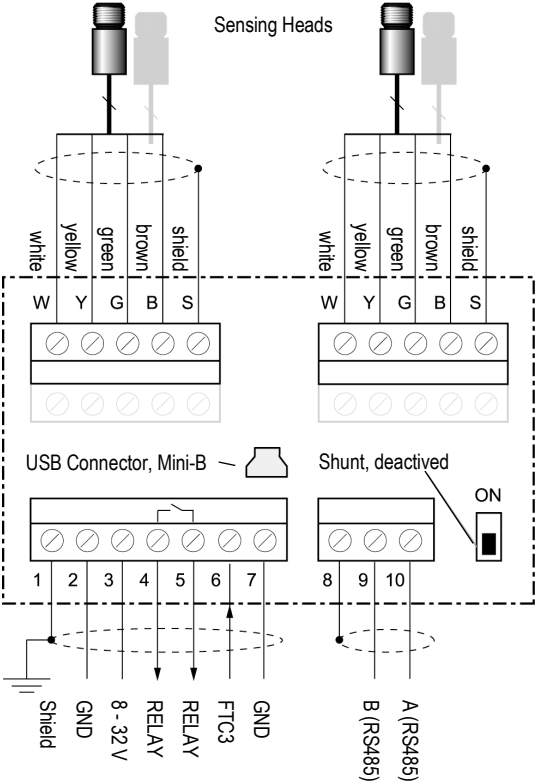

Figure 15: Terminal Wiring for the Comm Box DIN 4 TE

5.4.4 Comm Box (DIN 6 TE)

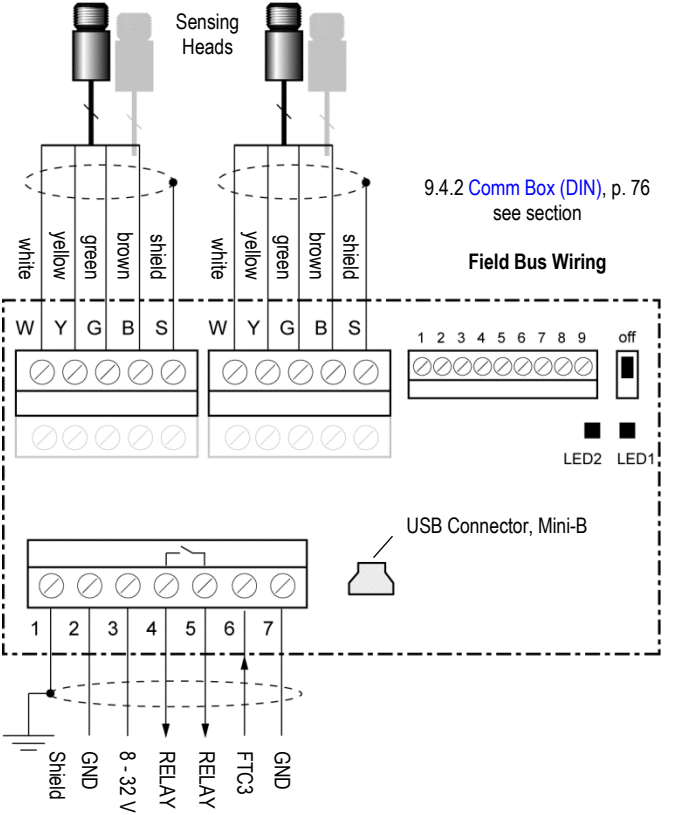

Figure 16: Terminal Wiring for the Comm Box DIN 6 TE

5.4.5 EMI Resistance for Comm Box (DIN)

To maintain EMI compliance to CE standards the attached Ferrite cores need to be placed on all wires! Make sure that the cable shields will be connected to the terminal pin <Shield>!

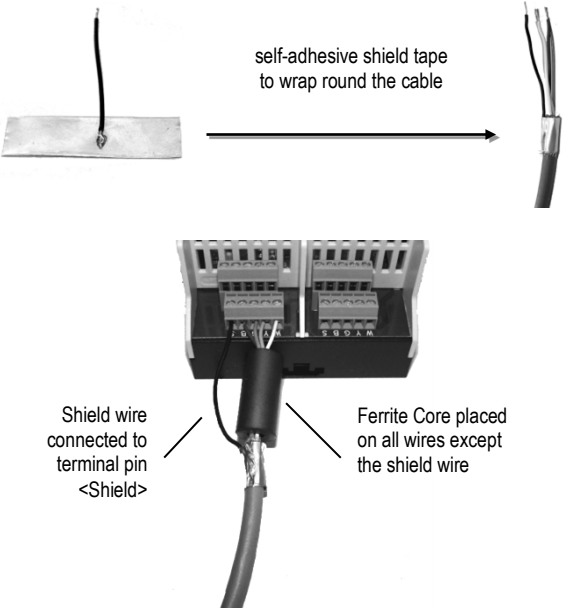

Figure 17: Mounting of Shield Wire and Ferrite Core

5.5 USB Connection

The USB interface comes with each box (USB connector, Mini-B). Connect a single unit to a USB computer port by using an appropriate USB cable.

Consider the following sequence for the installation:

1. Connect the box to the PC via the USB cable.
2. The <Found New Hardware Wizard> window pops up.
3. Ignore the <Automatic Hardware Installation>, navigate to the dedicated MI3 driver on the support DVD, and execute it.

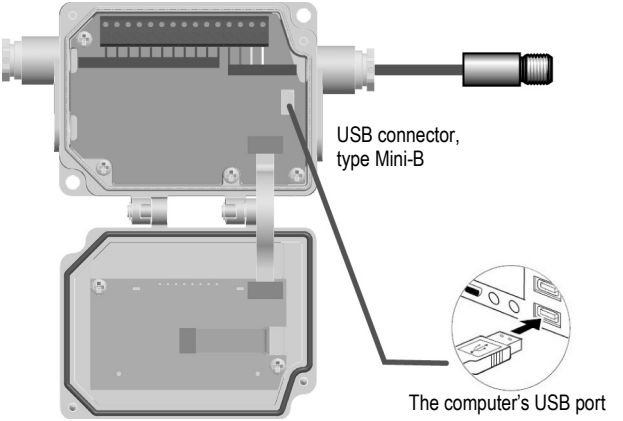

Figure 18: USB Connection via the Comm Box (metal)

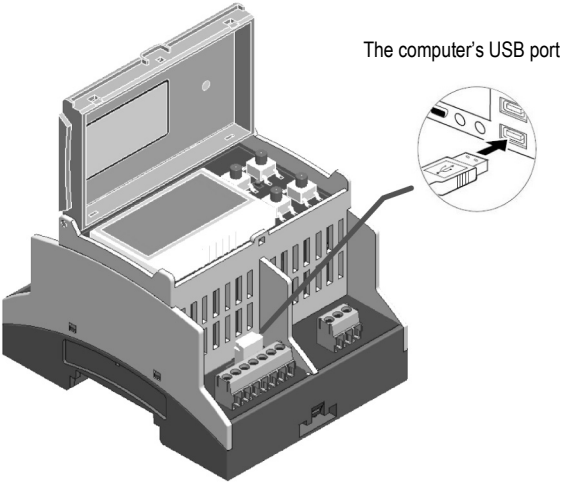

Figure 19: USB Connection via the Comm Box (DIN Rail)

5.6 Power On Procedure

To power the system, the following procedures are required.

5.6.1 One Head System

1. Disconnect power to the box.
2. Connect the wires for the head to the box terminal.
3. Power the box.
4. The box now assigns address 1 to the head.

5.6.2 Multiple Heads – Random Address Assignment

1. Disconnect power to the box.

2. Connect the wires for all heads to the box terminal.
3. Power the box.
4. The box automatically assigns a unique address to each of the heads – the mapping of physical head and head address is randomly.

5.6.3 Multiple Heads – User Controlled Address Assignment

1. Disconnect power to the box.
2. Connect the wires for the first head to the box terminal.
3. Power the box.
4. The box now assigns address 1 to the first head.
5. Follow the instructions 1 to 4 to add the next head. With each new head detected, the box increases the head address by 1.

The head address may be changed later by the user under the dedicated head page. See section 8.2 <Head> Page, page 59.

6 Outputs

For the outputs the following groupings (setups) are possible:

Output	Setup 1	Setup 2	Setup 3	Setup 4	Setup 5
OUT1	head temp. V	head temp. V	object temp. V	object temp. V	–
OUT2	object temp. mA	object temp. V	object temp. mA	object temp. V	head temp. V
TC	–	–	–	–	object temp.

6.1 Analog Output OUT1

Source: object temp. / head ambient temp.

Signal: 0 to 5/10 V

Terminal: OUT1, GND

This output can be configured for the object or the head ambient temperature. E.g. the output range for the head ambient temperature is 0 to 5 VDC corresponding to 0 to 500°C (32 to 932°F).
The minimum load impedance for the voltage output must be 10 kΩ.
The output is short circuit resistant.

The outputs <OUT1> and <TC> are not available at the same time!

6.2 Analog Output OUT2

	Source:	object temp. / head ambient temp.
	Signal:	0/4 to 20 mA or 0 to 5/10 V
	Terminal:	OUT2, GND

The signal output can be configured as either current or voltage output.
The minimum load impedance for the voltage output must be 10 kΩ.
The maximum current loop impedance for the mA output is 500 Ω.
The output is short circuit resistant.

6.3 Thermocouple Output TC

	Source:	object temperature
	Signal:	TCJ, TCK, TCR, or TCS
	Terminal:	TC, GND

This output can be configured as thermocouple output type J, K, R, or S. For that output, you must install a dedicated compensation cable. The output impedance is 20 Ω. The output is short circuit resistant.

The outputs <OUT1> and <TC> are not available at the same time!

6.4 Alarm Output RELAY

	Source:	object temp. / head ambient temp.
	Signal:	potential-free contacts
	Terminal:	RELAY, RELAY

The alarm output is controlled by the target object temperature or the head ambient temperature. In case of an alarm, the output switches the potential free contacts from a solid state relay. The maximum load for this output is 48 V / 300 mA.

If a spike voltage exceeding the absolute maximum rated value is generated between the output terminals, insert a clamping diode in parallel to the inductive load as shown in the following circuit diagram to limit the spike voltage.

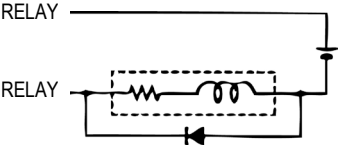

Figure 20: Spike Voltage Limitation for the Alarm Relay

7 Inputs

Three external inputs FTC1, FTC2, and FTC3 are used for the external control of the unit.

You cannot enable the input functions through the control panel!

	FTC1	FTC2	FTC3
Emissivity (analog control)	x		
Emissivity (digital control)	x	x	x
Ambient Background Temperature Compensation		x	
Trigger/Hold Function			x
Laser Switching			x

Table 2: Overview for FTC Inputs

7.1 Emissivity (analog)

Function: emissivity (analog control)

Signal: 0 to 5 VDC

Terminal: FTC1, GND

The FTC1 input can be configured to accept an analog voltage signal (0 to 5 VDC) to provide real time emissivity setting. Each input can support one head. The following table shows the relationship between input voltage and emissivity:

U in V	0.0	0.5	…	4.5	5.0
Emissivity	0.1	0.2	…	1.0	1.1

Table 3: Ratio between Analog Input Voltage and Emissivity

Example:
This process requires setting the emissivity:

- for product 1: 0.90
- for product 2: 0.40

Following the example below, the operator needs only to switch to position "product 1" or "product 2".

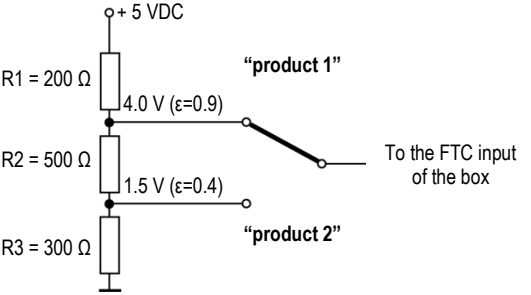

Figure 21: Adjustment of Emissivity at FTC Input (Example)

7.2 Emissivity (digital)

	Function:	emissivity (digital control)
	Signal:	digital low/high
	Terminal:	FTC1-3, GND

The box electronics contains a table with 8 pre-installed settings for emissivity. To activate these emissivity settings, you need to have the inputs FTC1, FTC2, and FTC3 connected. According to the voltage level on the FTC inputs, one of the table entries will be activated.

0 = Low signal (0 V)
1 = High signal (from 5 V to V_{DC})

A non-wired input is considered as not defined!

Table entry	Emissivity (Examples)	FTC3	FTC2	FTC1
0	1.100	0	0	0
1	0.500	0	0	1
2	0.600	0	1	0
3	0.700	0	1	1
4	0.800	1	0	0
5	0.970	1	0	1
6	1.000	1	1	0
7	0.950	1	1	1

Figure 22: Digital Selection of Emissivity with FTC Inputs

The values in the table cannot be changed through the control panel.

7.3 Ambient Temperature Compensation

	Function:	Ambient Temperature Compensation
	Signal:	0 to 5 V_{DC}
	Terminal:	FTC2, GND

The sensor is capable of improving the accuracy of target temperature measurements by taking into account the ambient or background temperature. This feature is useful when the target emissivity is below 1.0 and the background temperature is significantly hotter than the target temperature. For instance, the higher temperature of a furnace wall could lead to hotter temperatures being measured especially for low emissivity targets.
Ambient background temperature compensation allows for the impact of reflected radiation in accordance with the reflective behavior of the target. Due to the surface structure of the target, some amount of ambient radiation will be reflected and therefore, added to the thermal radiation that is collected by the sensor. The ambient background temperature compensation adjusts the final result by subtracting the amount of ambient radiation measured from the sum of thermal radiation the sensor is exposed to.

The ambient background temperature compensation should always be activated in case of low emissivity targets measured in hot environments or when heat sources are near the target!

Three possibilities for ambient background temperature compensation are available:

- The **internal sensing head temperature** is utilized for compensation assuming that the ambient background temperature is more or less represented by the internal sensing head temperature. This is the default setting.
- If the background ambient temperature is known and constant, the user may give the known ambient temperature as a **constant temperature value**.
- Ambient background temperature compensation from a **second temperature sensor** (infrared or contact temperature sensor) ensures extremely accurate results. For example, a second IR sensor, configured to provide a 0 to 5 volt output scaled for the same temperature range as the target can be connected to input FTC2 to provide real-time ambient background compensation.

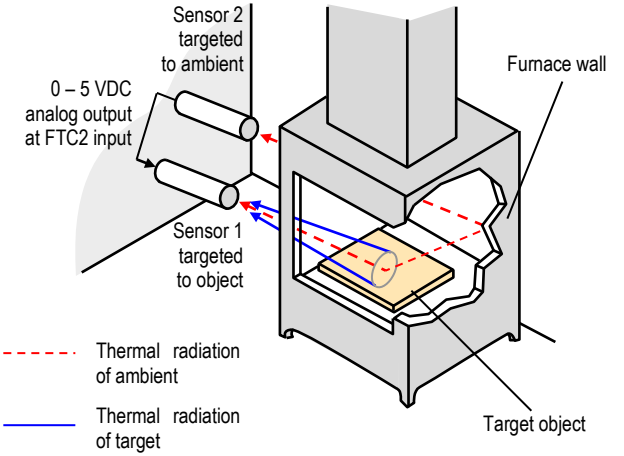

Figure 23: Principle of Ambient Background Temperature Compensation

7.4 Trigger/Hold

Function:	Trigger/Hold
Signal:	digital low/high
Terminal:	FTC3, GND

The FTC3 input can be used as an external trigger functioning as "Trigger" or "Hold". All sensing heads are effected by the FTC3 input at the same time.

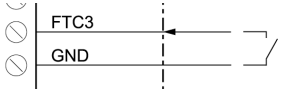

Figure 24: Wiring of FTC3 as Trigger/Hold

Trigger: A logical low signal at the input FTC3 will reset the peak or valley hold function. As long as the input is kept at logical low level, the software will transfer the actual object temperatures toward the output. At the next logical high level, the hold function will be restarted.

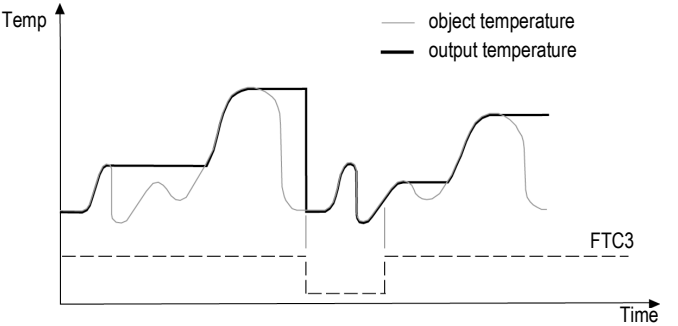

Figure 25: FTC for Resetting the Peak Hold Function

Hold: This mode acts as an externally generated hold function. A transition at the input FTC3 from logical high level toward logical low level will transfer the current temperature toward the output. This temperature will be written to the output until a new transition from high to low occurs at the input FTC3.

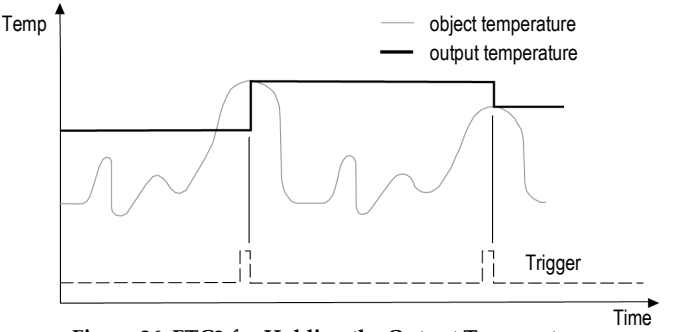

Figure 26: FTC3 for Holding the Output Temperature

7.5 Laser Switching

Function:	Laser switching on/off
Signal:	digital low/high
Terminal:	FTC3, GND

The FTC3 input can also be used as an external trigger to switch the laser (only available for selected sensing head models). A transition at the input from logical high level toward logical low level will switch the laser. All sensing heads are effected by the FTC3 input at the same time.

Figure 27: Wiring of FTC3 as Laser Switching

8 Operation

Once you have the sensor positioned and connected properly, the system is ready for continuous operation.
The control panel is accessible on the outside of the box. Push buttons provide positive tactile feedback to the user. User interface includes a backlit LCD, displaying sensor set up parameters and temperature outputs.
Alternatively, the operation of the sensor can be done by means of the software that came with your sensor.

8.1 Control Panel

The sensor system is equipped with a control panel integrated in the box lid, which has setting/controlling buttons and an LCD display.

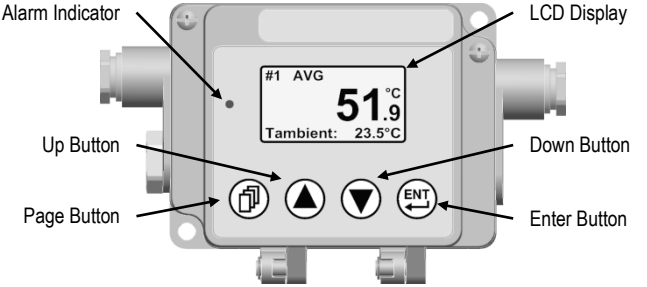

Figure 28: Control Panel for the Comm Box

The control panel for the DIN Rail Comm Box provides the same operating elements.

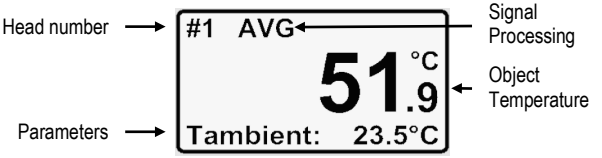

Figure 29: Elements of the LCD Display

The head number is shown only if two or more sensing heads are connected to the communication box.

Symbol Display	Signal Processing	Remark
AVG	Average	
PH	Peak Hold	
VH	Valley Hold	
HOLD	Trigger set to HOLD funktion	
APH	Advanced Peak Hold	Software controlled
APHA	Advanced Peak Hold with Averaging	Software controlled
AVH	Advanced Valley Hold	Software controlled
AVHA	Advanced Valley Hold with Averaging	Software controlled

Table 4: Symbols in the Display for the Signal Processing

Pushing the keys of the control panel will cause the following actions:

ENT enters the menu or save parameters

enters the next page

No action for 10 s forces the unit to leave the menu without saving of parameters.

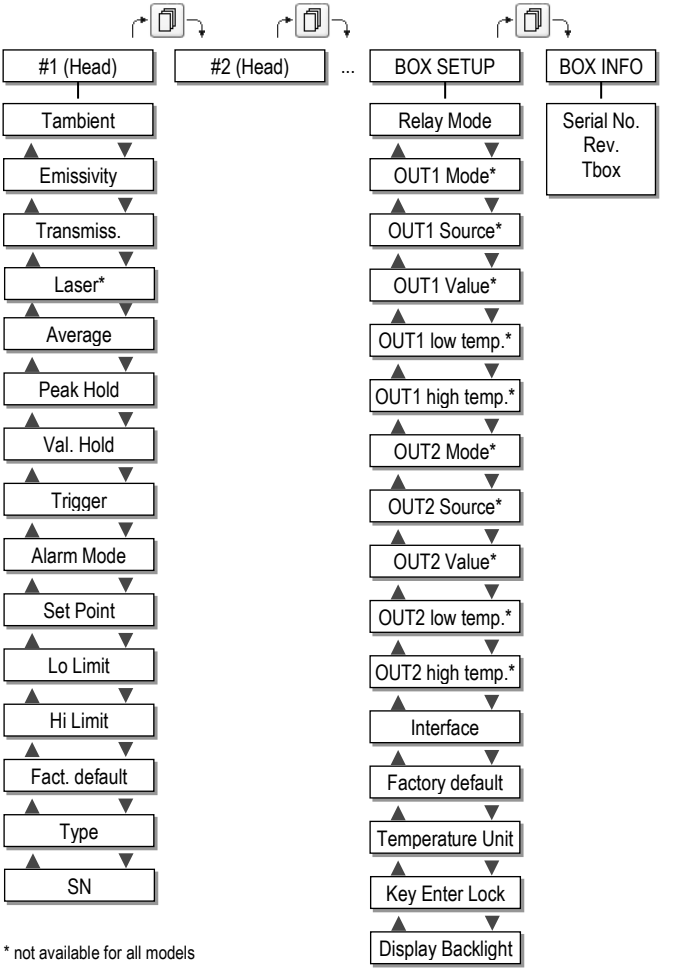

* not available for all models

8.2 <Head> Page

<Tambient> current head ambient temperature

<Emissivity> changes the emissivity value for the selected head. The emissivity is a calculated ratio of infrared energy emitted by an object to the energy emitted by a blackbody at the same temperature (a perfect radiator has an emissivity of 1.00). For information on determining an unknown emissivity and for sample emissivities
See section 15.2 Typical Emissivity Values, page 144.

<Transmiss.> changes the transmission value when using protective windows. For example, if a protective window is used with the sensor, set the transmission to the appropriate value.

<Laser> handles the laser in the following modes:
<off> switches the laser off
<flash> forces the laser to blink at 8 Hz
<on> switches the laser permanently on
<external> switches the laser via external input FTC3
An activated laser will be switched off automatically after 10 minutes.
The laser is available for 1M and 2M heads only. The laser can be activated at the same time for maximal 4 heads.

<Avgerage> AVG signal post processing set to averaging, parameter given in seconds. Once <Average> is set above 0 s, it automatically activates. Note that other hold functions (like Peak Hold or Valley Hold) cannot be used concurrently. Value range: 0.0 to

998.9 sec, ∞
See section 8.5.1 Averaging, page 65.

<Peak Hold> PH signal post processing set to Peak Hold, parameter given in seconds. Once <Peak Hold> is set above 0 s, it automatically activates. Note that other hold functions (like Valley Hold or Averaging) cannot be used concurrently. Value range: 0.0 to 998.9 sec, ∞
See section 8.5.2 Peak Hold, page 66.

<Val. Hold> VH signal post processing set to Valley Hold, parameter given in seconds. Once <Valley Hold> is set above 0 s, it automatically activates. Note that other hold functions (like Peak Hold or Averaging) cannot be used concurrently. Value range: 0.0 to 998.9 sec, ∞
See section 8.5.3 Valley Hold, page 67.

<Trigger> defines the trigger mode for the selected head:
<trig>: … to reset the peak or valley hold function
<hold>: activates the hold function
See section 7.4 Trigger/Hold, page 53.

<Alarm Mode> defines the alarm mode for the selected head:
<Tobj>: object temperature as alarm source
<Tamb>: head ambient temperature as alarm source

<Set Point> defines a temperature threshold for an alarm

<Lo Limit> low end of temperature measurement range (read only)

<Hi Limit> high end of temperature measurement range (read only)

<Fact. default>	sets the selected head back to factory default. The factory default values are to be found in section 14.1.9 Command Set, page 124.
<Type>	provides the head model, e.g. MI3LT
<SN>	provides the serial number for the selected head and allows to reassign a new head address

8.3 <Box Setup> Page

<Relay Mode>	defines the switching behavior for the box internal alarm relay: <normally open>: open contact in non-alarm status <normally closed>: closed contact in non-alarm status <permanently OFF>: permanently open contacts <permanently ON>: permanently closed contacts
<OUT1 Mode>	defines the mode for the analog output: <TCJ>, <TCK>, <TCR>, <TCS> <0-5V> <0-10V> <disable> output goes to high-resistance
<OUT1 Source>	assigns the selected head to the analog output: <#1>, <#2>, …, <$Head_{max}$>
<OUT1 Value>	defines the basis for the output value: <Tobject>: object temperature to be output <Tambient>: head ambient temperature to be output
<OUT1 low temp.>	defines the temperature for the low end of the analog output range (scaling)
<OUT1 high temp.>	defines the temperature for the high end of the analog output range (scaling)
<OUT2 Mode>	defines the mode for the analog output 2: <0-20mA> <4-20mA> <0-5V>

	<0-10V> <disable> output goes to high-resistance
<OUT2 Source>	assigns the selected head to the analog output: <#1>, <#2>, …, <Head$_{max}$>
<OUT2 Value>	defines the basis for the output value: <Tobject>: object temperature to be output <Tambient>: head ambient temperature to be output
<OUT2 low temp.>	defines the temperature for the low end of the analog output range (scaling)
<OUT2 high temp.>	defines the temperature for the high end of the analog output range (scaling)
<Interface>	configures the digital interface: **RS485/Profibus/Modbus:** <address>: unique address of the box in the network. <baudrate>: baud rate for the box. Each device in the network must be set to the same baud rate. The baud rate for Profibus is automatically negotiated between master and slave.
<Factory default>	sets the box back to factory default. The factory default values are to be found in section 14.1.9 Command Set, page 124.
<Temperature Unit>	the temperature unit can be set to °C or °F. Note that this setting influences the digital interfaces like RS485 for both object and head ambient temperature.
<Key Enter Lock>	the box has a user interface lockout feature that keeps the box from being accidentally changed

from the control panel (locked by default in multidrop mode). This lockout mode denies access to the button to avoid the saving of adjustable parameters. The unit can be unlocked by pressing the button and the button simultaneously for 3 seconds.

<Display Backlight> defines the switching behavior for the display:
<ON>: switches the backlight on
<OFF>: switches the backlight off
<60sec.OFF>: switches the backlight off after the giving time
To preserve the display's longevity, the backlight should be turned off in case of not using it!

8.4 <Box Info> Page

<Serial No.>: serial number of the box.

<Rev>: firmware revision

Tbox: current box ambient temperature

8.5 Post Processing

8.5.1 Averaging

Averaging is used to smooth the output signal. The signal is smoothed depending on the defined time basis. The output signal tracks the detector signal with significant time delay but noise and short peaks are damped. Use a longer average time for more accurate damping behavior. The average time is the amount of time the output signal needs to reach 90% magnitude of an object temperature jump.

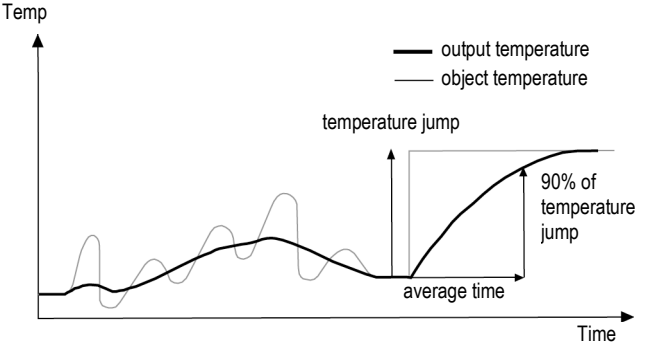

Figure 30: Averaging

A low level input (GND) at external input FTC3 will promptly interrupt the averaging and will start the calculation again.

Attention: The disadvantage of averaging is the time delay of the output signal. If the temperature jumps at the input (hot object), the output signal reaches only 90% magnitude of the actual object temperature after the defined average time.

8.5.2 Peak Hold

The output signal follows the object temperature until a maximum is reached. The output will „hold“ the maximum value for the selected duration of the hold time. Once the hold time is exceeded, the peak hold function will reset and the output will resume tracking the object temperature until a new peak is reached. The range for the hold time is 0.1 to 998.9 s.

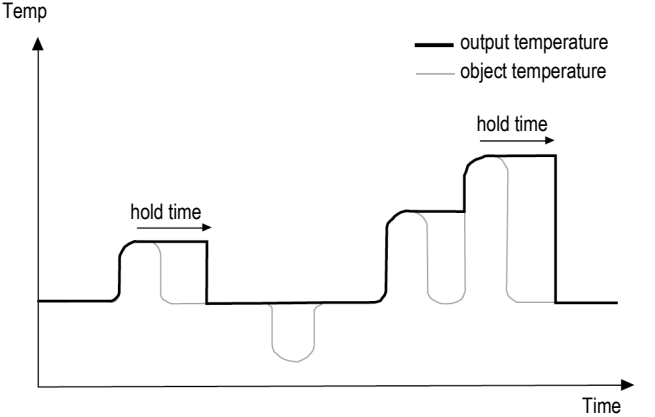

Figure 31: Peak Hold

A defined hold time of 999 s (symbol “∞” in the display) will put the device into continuous peak detection mode.
A low level input (GND) at external input FTC3 will promptly interrupt the hold time and will start the maximum detection again.

8.5.3 Valley Hold

The output signal follows the object temperature until a minimum is reached. The output will „hold“ the minimum value for the selected duration of the hold time. Once the hold time is exceeded, the valley hold function will reset and the output will resume tracking the object temperature until a new valley is reached. The range for the hold time is 0.1 to 998.9 s

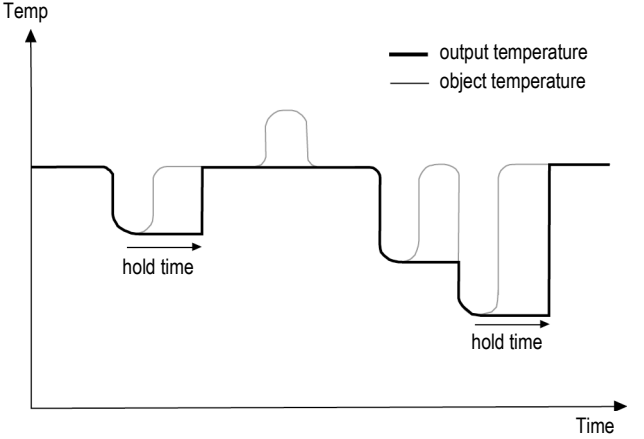

Figure 32: Valley Hold

A defined hold time of 999 s (symbol “∞” in the display) will put the device into continuous valley detection mode.
A low level input (GND) at external input FTC3 will promptly interrupt the hold time and will start the minimum detection again.

8.5.4 Advanced Peak Hold

This function searches the sensor signal for a local maximum (peak) and writes this value to the output until a new local maximum is found. Before the algorithm restarts its search for a local maximum, the object temperature has to drop below a predefined threshold. If the object temperature rises above the held value, which has been written to the output so far, the output signal follows the object temperature again. If the algorithm detects a local maximum while the object temperature is currently below the predefined threshold, the output signal jumps to the new maximum temperature of this local maximum. Once the actual temperature has passed a maximum above a certain magnitude, a new local maximum is found. This magnitude is called hysteresis.

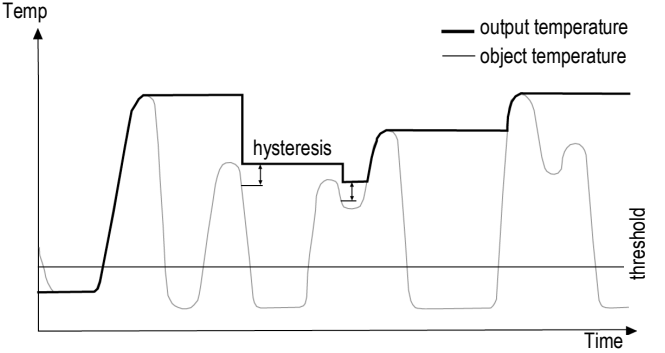

Figure 33: Advanced Peak Hold

The advanced peak hold function is only adjustable by means of the DataTemp Multidrop Software.

8.5.5 Advanced Valley Hold

This function works similar to the advanced peak hold function, except that it will search the signal for a local minimum.

8.5.6 Advanced Peak Hold with Averaging

The output signal delivered by the advanced peak hold functions tends to jump up and down. This is due to the fact, that only maximum points of the otherwise homogenous trace will be shown. The user may combine the functionality of the peak hold function with the averaging function by choosing an average time, thus, smoothing the output signal for convenient tracing.

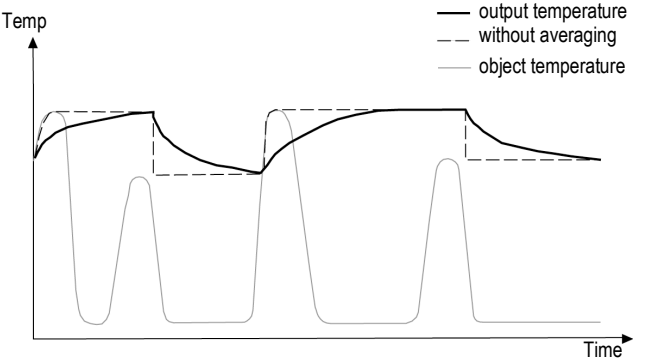

Figure 34: Advanced Peak Hold with Averaging

The advanced peak hold function with averaging is only adjustable by means of the DataTemp Multidrop Software.

8.5.7 Advanced Valley Hold with Averaging

This function works similar to the advanced peak hold function with averaging, except it will search the signal for a local minimum.

9 Fieldbuses

9.1 RS485

The RS485 serial interface is used for long distances up to 1200 m (4000 ft) or for networked communication boxes.
To connect the RS485 interface to a standard computer you should use a dedicated adapter, see section 11.1.2 USB/RS485 Adapter, page 84.
The RS485 interface allows the communication either via the standard Multidrop Software or directly via dedicated ASCII commands, see section 14.1 ASCII Programming, page 115.

Specification:

Address range:	1 to 32 0 for stand-alone unit or broadcast transmission
Baud rate:	9.6, 19.2, 38.4, 57.6, 115.2 kBit/s
Wiring:	2 wire, half-duplex, electrically isolated

9.2 Profibus

Profibus DP-V0 defines a cyclical data exchange between a master (e.g. a PLC) and a slave (Raytek sensor). At start-up first an array of parameters (Profibus specific data) is sent from the master to the slave, followed by an array with the configuration (sensor specific presetting's taken from the GSD file) also sent from the master to the slave.
After start-up the bus switches to the data exchange state. In this state in- and output data gets exchanged cyclically between master and slave. The **input data** is sent from the slave to the master and contains mainly the measured temperatures of the Raytek sensor, see section 14.2.2 Input Data, page 132. The **output data** is sent from the master to the slave and contains a set of selected sensor parameters, see section 14.2.3 Output Data, page 133. In case of an error in start-up phase or during data exchange **diagnostic data** is sent to the master, see section 14.2.4 Diagnose Data, page 134.

Each Profibus device comes with a device description file (GSD file) which is read by the programming software of the master to define the slave.

Specification:

Version:	Profibus DP-V0
Address range:	1 to 125
Baud rate:	9.6 kBit/s to 12 MBit/s (automatic negotiated)
Wiring:	2 wire, electrically isolated
ID	0D36
GSD file	"RAY_0D36.gsd"

For more detailed information see section 14.2 Profibus Programming, page 131.

9.3 Modbus

The Modbus protocol follows the master/slave model. One master controls one or more slaves. Typically, the master sends a request to a slave, which in turn sends a response. The request/response mechanism is called a transaction. Requests and responses are also referred to as messages.

Specification:

Version:	Modbus serial line (RS485)
Mode:	RTU (Remote Terminal Unit)
Address range:	1 to 247
Baud rate:	9.6, 19.2, 38.4, 57.6, 115.2 kBit/s
Wiring:	2 wire, electrically isolated

For more detailed information see section 14.3 Modbus, page 137.
The detailed specification can be found under
http://www.modbus-ida.org/.

9.4 Fieldbus Wiring

9.4.1 Comm Box (metal)

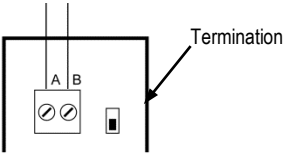

Figure 35: RS485 Terminal for Comm Box (metal)

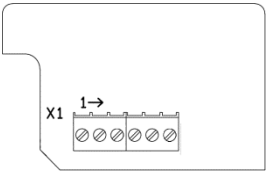

X1 Pin Terminal	Profibus	Modbus
1	A (negative signal)	D0 (negative signal)
2	B (positive signal)	D1 (positive signal)
3	Shield	Shield
4	GND	GND
5	n.a.	n.a.
6	+ 5 V	+ 5 V
LED, yellow	Blinking: 0.5 Hz: parameters 1 Hz: configuration	Communication
LED, red	ON: data-exchange	Error

Figure 36: Profibus and Modbus Terminal for Comm Box (metal)

Profibus	Sub-D Pin (cable color)	M12 Pin (cable color)
A (negative signal)	8 (green)	2 (green)
B (positive signal)	3 (yellow)	4 (red)
Shield		
GND	5 (white)	3 (blue)
n.a.		
+ 5 V	6 (brown)	1 (brown)

Figure 37: Profibus Pin Assignment for Sub-D / M12 Connector

A Sub-D female connector or a M12 female connector can be ordered separately for Profibus. The M12 connector is B-coded.
Please note the Sub-D connector is not IP rated!

Figure 38: Sub-D Connector (…P2) and M12 Connector (…P1)

The termination for Profibus and Modbus networks must be realized externally by the user!

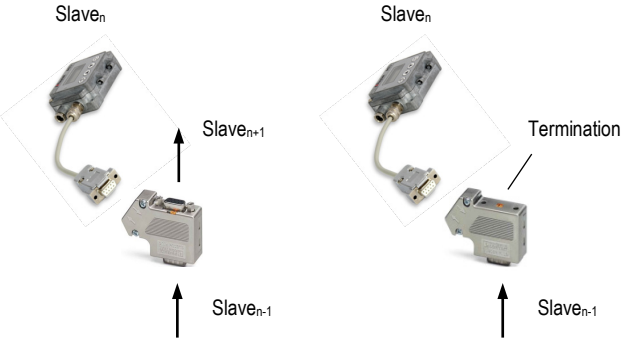

Figure 39: Exemplary Network with External Termination

9.4.2 Comm Box (DIN)

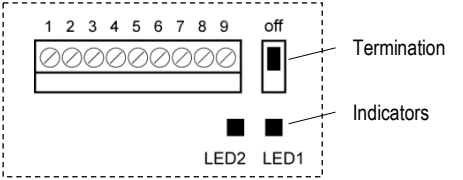

Pin	RS485	Profibus	Modbus
1	GND	GND	GND
2	Shield	Shield	Shield
3 (negative signal)	A2 (not supported while termination "on")	A2 (not supported while termination "on")	D0_2 (not supported while termination "on")
4 (positive signal)	B2 (not supported while termination "on")	B2 (not supported while termination "on")	D1_2 (not supported while termination "on")
5 (negative signal)	A1	A1	D0_1
6 (positive signal)	B1	B1	D1_1
7	Shield	Shield	Shield
8	GND	GND	GND
9	n.a.	DE	n.a.
LED1, yellow	n.a.	Blinking: 0.5 Hz: parameters 1 Hz: configuration	Communication
LED2, red	n.a.	ON: data-exchange	Error

Figure 40: Terminal for Comm Box (DIN 6TE)

9.5 Fieldbus Configuration

Each slave in the network must have a unique address and must run at the same baud rate!

For setting the fieldbus configurations through the control panel, see section 8.3 <Box Setup> Page, page 62.

9.6 Fieldbus Installation

The recommended way to add more devices into a network is connecting each device in series to the next in a linear topology (daisy chain).
Use only one power supply for all boxes in the network to avoid ground loops!

It is strongly recommended to use shielded and pair twisted cables (e.g. CAT.5)!

Make sure the network line is terminated!

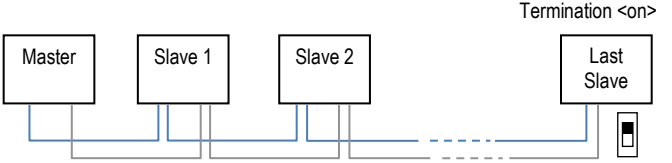

Figure 41: Network in Linear Topology (daisy chain)

10 Options

Options are items that are factory installed and must be specified at time of order. The following are available:

- Longer head cables in the lengths:
  3 m / 9.8 ft. (…CB3)
  8 m / 262 ft. (…CB8)
  15 m / 49 ft. (…CB15)
  30 m / 98 ft. (…CB30)
- RS485 serial interface for Comm Box (…4)
- Profibus interface for Comm Box metal
  …P1 → Sub-D connector
  …P2 → M12 connector
- Modbus interface for Comm Box metal
  …M → wiring via terminal
- Profibus interface for Comm Box DIN
  …P → wiring via terminal
- Modbus interface for Comm Box DIN
  …M → wiring via terminal

11 Accessories

A full range of accessories for various applications and industrial environments are available. Accessories include items that may be ordered at any time and added on-site.

11.1 Accessories (all models)

- Multi-Channel Box (XXXMI3CONNBOX)
- USB/RS485 Adapter for boxes with RS485 interface (XXXUSB485)

11.1.1 Multi-Channel Box

The Multi-Channel Box can be used for all communication boxes. The box includes 8 sets of field wiring terminals wired in parallel to one 5 m (16 ft) cable set to connect to the communication box.

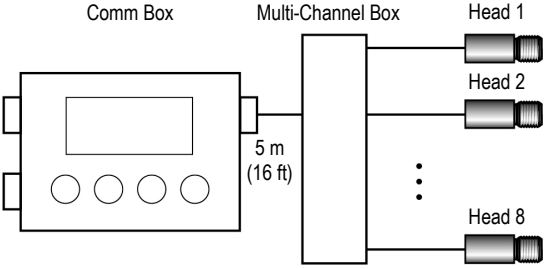

Figure 42: Multiple Head Configuration with Comm Box

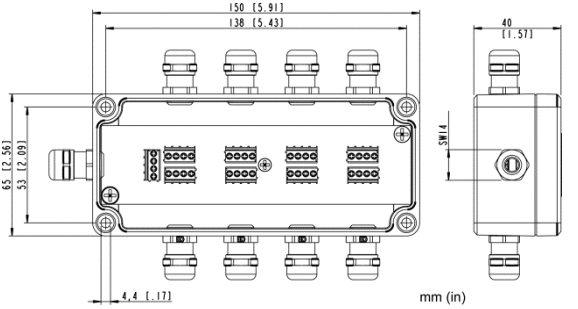

Figure 43: Dimensions

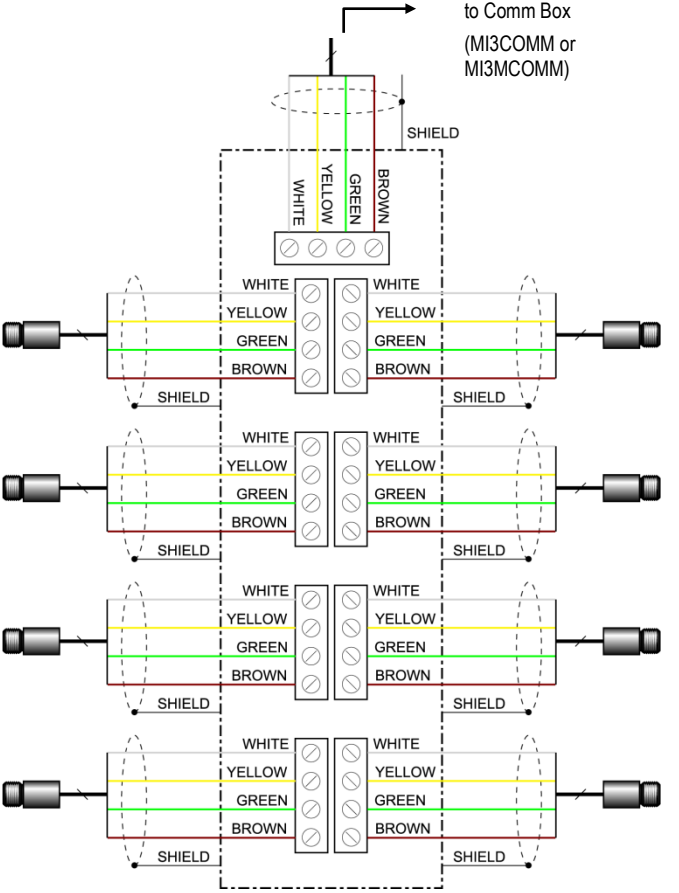

Figure 44: Wiring Diagram for 8 Heads

Please note the correct mounting of the cable shield requires a strong metallic contact to the grommet.

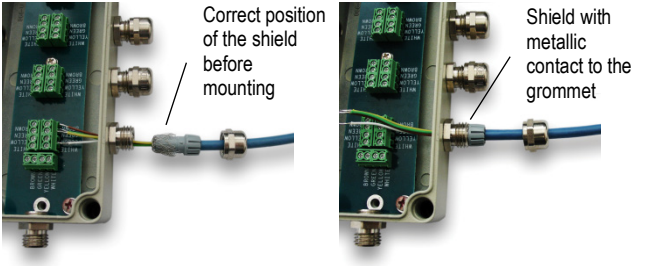

Figure 45: Correct Mounting of the Cable Shield

The total sensing head cable length for all networked sensing heads must not exceed 30 m/98 ft (for MI3) and 2x30 m/2x98 ft (for MI3M)!

11.1.2 USB/RS485 Adapter

The USB/RS485 adapter is self-powering via the USB connection.

Figure 46: USB/RS485 Adapter (XXXUSB485)

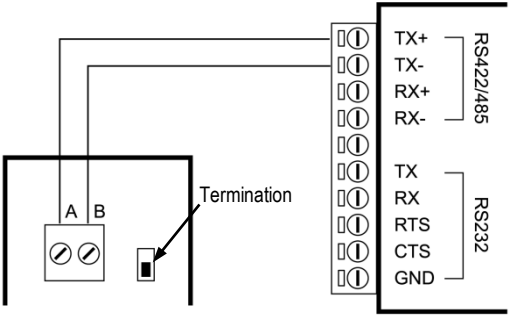

Figure 47: Wiring the RS485 Interface of the Box (left) and USB/RS485 Adapter (right)

11.2 Accessories (LT, G5 Heads)

- Adjustable Mounting Bracket (XXXMIACAB)
- Fixed Mounting Bracket (XXXMIACFB)
- Sensing head mounting nut (XXXMIACMN)
- Air Purge Jacket (XXXMIACAJ)
- Air Cooling System with 0.8 m (2.6 ft.) air hose (XXXMIACCJ) or with 2.8 m (9.2 ft.) air hose (XXXMIACCJ1)
- Right Angle Mirror (XXXMIACRAJ, XXXMIACRAJ1)
- Protective Windows
- Close Focus Lens (XXXMI3ACCFL)

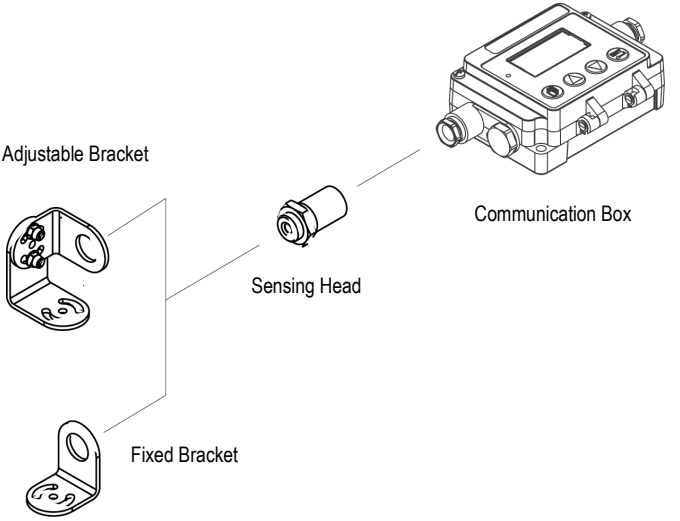

Figure 48: Standard Accessories for LT, G5 Heads

11.2.1 Adjustable Mounting Bracket

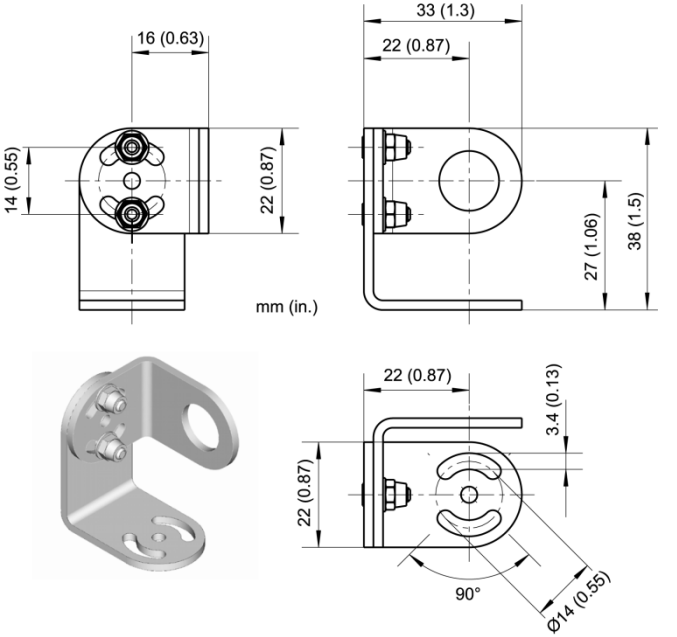

Figure 49: Adjustable Mounting Bracket (XXXMIACAB)

11.2.2 Fixed Mounting Bracket

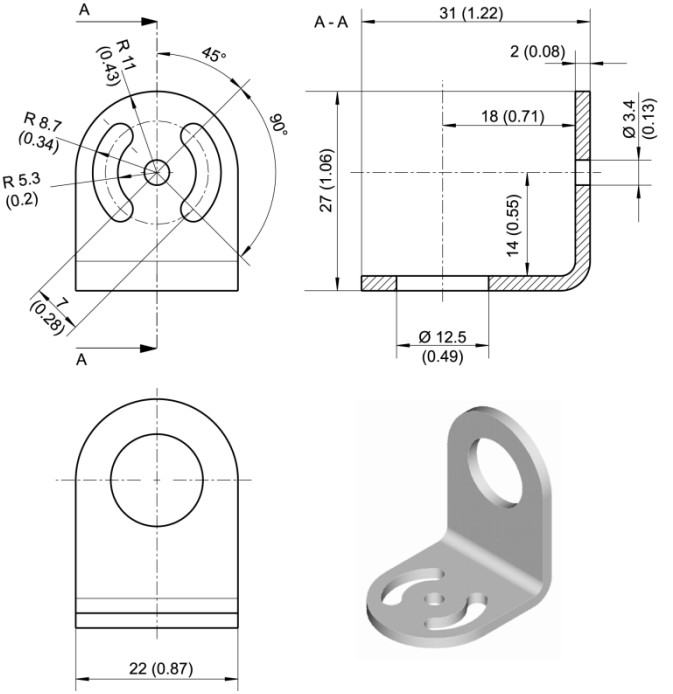

Figure 50: Fixed Mounting Bracket (XXXMIACFB)

11.2.3 Air Purge Jacket

The air purge jacket is used to keep dust, moisture, airborne particles, and vapors away from the sensing head. Clean, oil free air is recommended. The air purge jacket withstands ambient temperatures up to 180°C (356°F) and has limited use for cooling purposes. The recommended air flow rate is 30 to 60 l / min (0.5 to 1 cfm). The max. pressure is 5 bar (73 PSI).

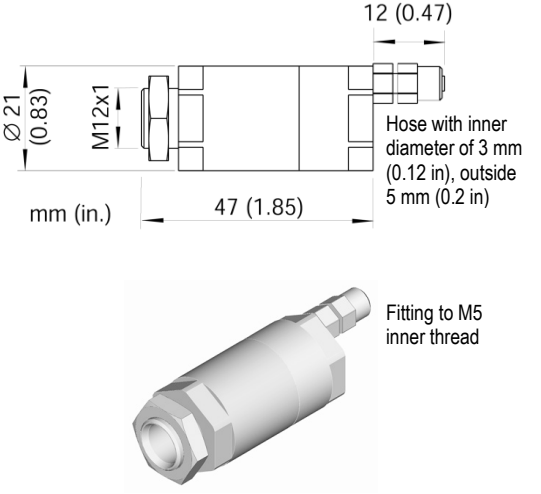

Figure 51: Air Purge Jacket (XXXMIACAJ)

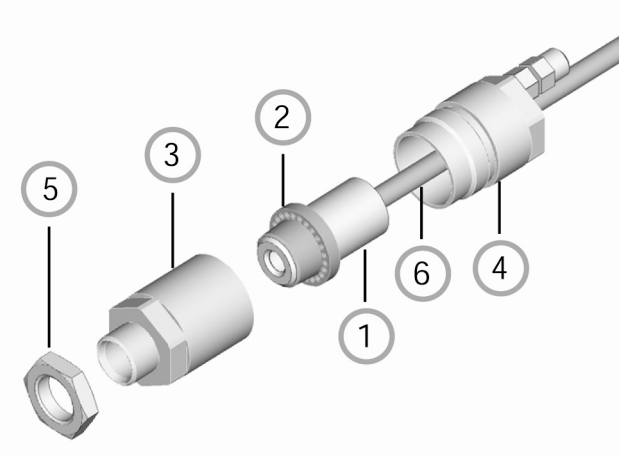

Figure 52: Mounting the Air Purge Jacket

1. Remove the sensor ① and cable from the communication box by disconnecting the wires from the terminal.
2. Open the Air Purge Jacket ③ ④ and screw the white plastic fitting ② onto the sensor up to the end of the threads. Do not over-tighten!
3. Slip the cable ⑥ through the backside ④ of the jacket.
4. Close the Air Purge Jacket ③ ④, reconnect the wires to the communication box and apply the mounting nut ⑤.

11.2.4 Air Cooling System

The sensing head can operate in ambient temperatures up to 200°C (392°F) with the air-cooling system. The air-cooling system comes with a T-adapter including 0.8 m / 31.5 in (optional: 2.8 m / 110 in) air hose and insulation. The T-adapter allows the air-cooling hose to be installed without interrupting the connections to the box.

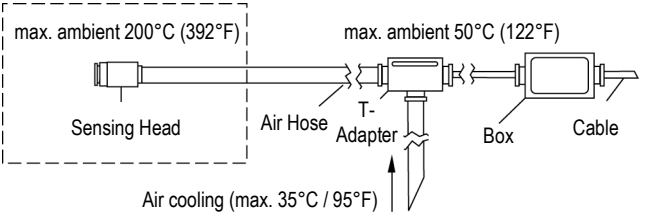

The air-cooling jacket may be combined with the right angle mirror.

Figure 53: Air Cooling System

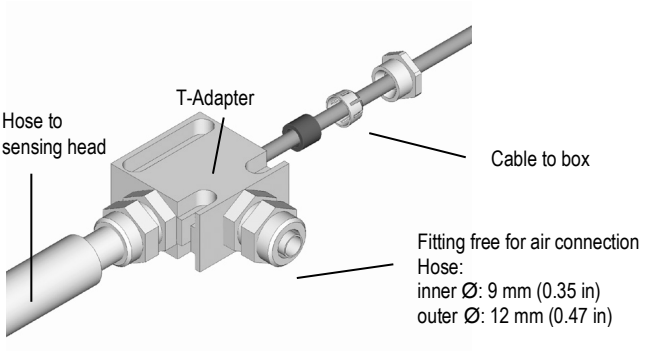

Figure 54: Connecting the T-Adapter (XXXMIACCJ)

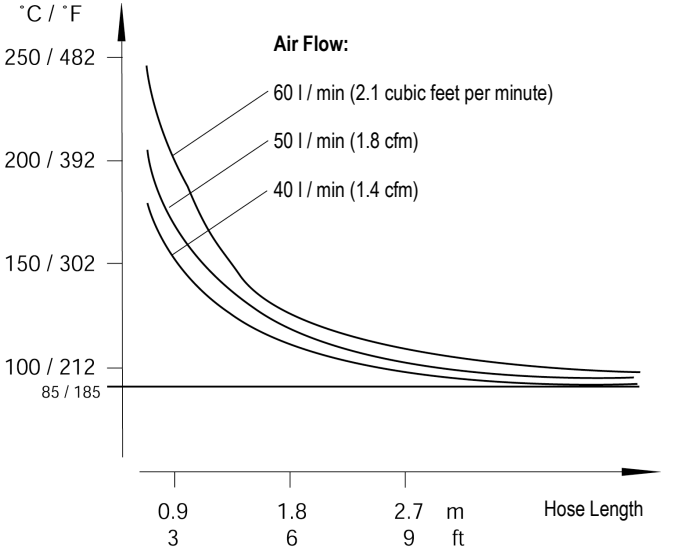

Figure 55: Maximum Ambient Temperature is dependent on Air Flow and Hose Length

Note: "Hose Length" is the length of the hose exposed to high ambient temperature (not the overall length of the hose).

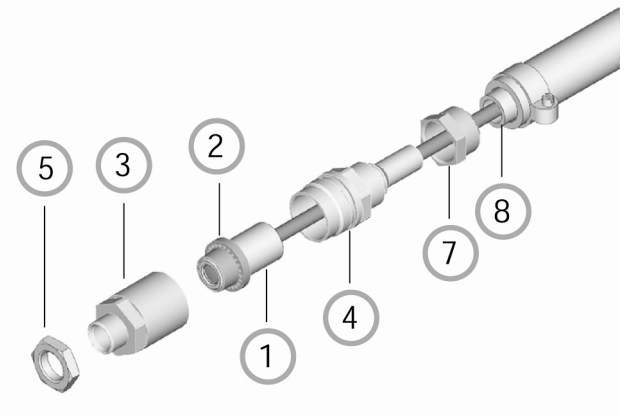

Figure 56: Air Cooling System: Purging Jacket

The Air Cooling System consists of:

① sensing head

② inner plastic fitting (air purge jacket)

③ front part of the air-purging jacket

④ back part of the air-purging jacket

⑤ mounting nut

⑥ preinstalled cable between sensor and box, leading through the T-adapter

⑦ hose connecting nut

⑧ inner hose

⑨ outer hose

⑩ T-adapter

⑪ rubber washer

⑫ plastic compression fitting

⑬ cap

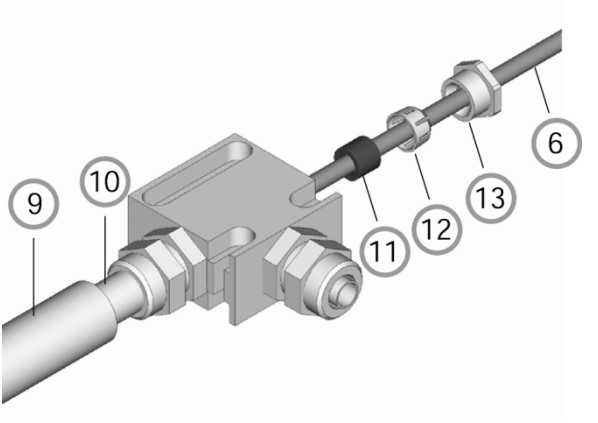

Figure 57: Air Cooling System: T-Adapter

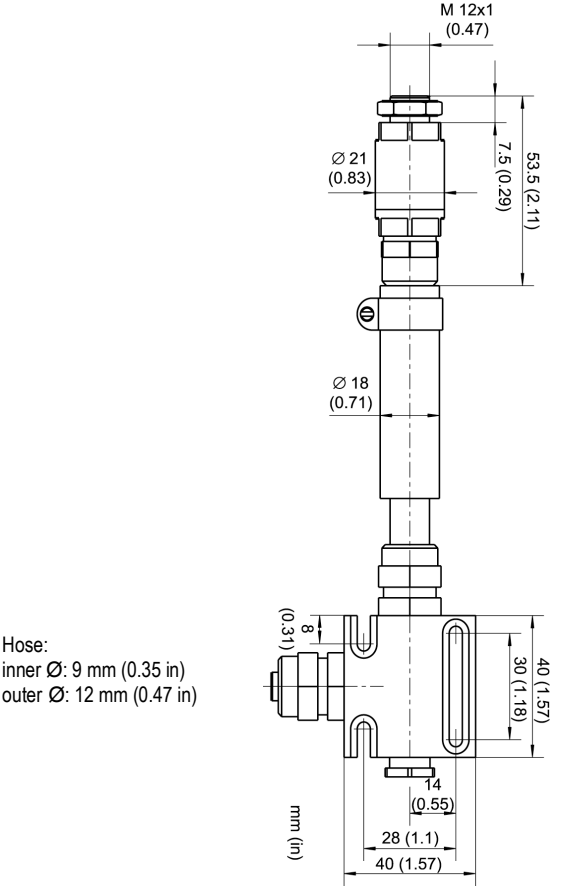

Figure 58: Dimensions of Air Cooling System

11.2.5 Right Angle Mirror

The right angle mirror comes in two different versions:

XXXMIACRAJ	right angle mirror as accessory for air purge jacket or air cooling system
XXXMIACRAJ1	right angle mirror with integrated air purge

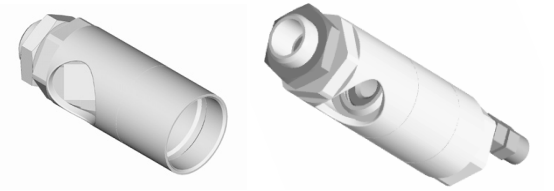

Figure 59: Right Angle Mirror XXXMIACRAJ (left), Right Angle Mirror with Air Purge XXXMIACRAJ1 (right)

The right angle mirror withstands ambient temperatures up to 180°C (356°F).

For mounting the right angle mirror (XXXMIACRAJ), see section 11.2.3 Air Purge Jacket, page 88. However, instead of using the front part of the air purge jacket ③, mount the right angle mirror.

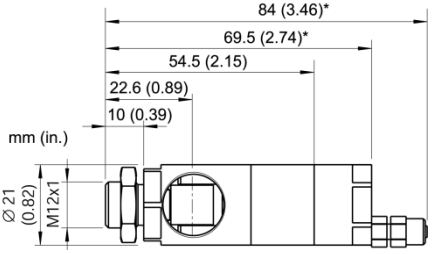

Figure 60: Right Angle Mirror (* with Air Purge)

The IR beam length within the right angle mirror is 18 mm (0.7 in.) which needs to be considered for spot size calculations.

11.2.6 Protective Windows

Protective windows can be used to protect the sensing head from dust and other contamination.
The protective window can be directly screwed onto the sensing head. It has an outer diameter of 17 mm (0.67 in).
The following table provides an overview of the available windows.

Order number	Material	Transmission	T ambient
XXXMIACPW	Zinc Sulfide stainless steel	0.75 ±0.05 (for LT, G5 models)	180°C (356°F)
XXXMI3ACPWP	Polymer stainless steel	0.7 ±0.02 (LT models only)	65°C (149°F)

Table 5: Available Protective Windows

For correct temperature readings, the transmission of the protective window must be set via the control panel in the communication box. See section 8.2 <Head> Page, page 59!

Figure 61: Protective Window

11.2.7 Close Focus Lens

The close focus lens is designed to get very small measurement spots down to 0.5 mm (0.02 in). The lens should be used for LT models only.

The close focus lens is made from Silicon, with a focal distance of 10 mm (0.39 in) and a transmission factor of 0.75 ± 0.01 (for 8 to 14 µm). It has an outer diameter of 17 mm (0.67 in). The close focus lens can be directly screwed onto the sensing head. It withstands ambient temperatures up to 180°C (356°F).

For correct temperature readings, the transmission of the close focus lens must be set via the control panel in the communication box. See section 8.2 <Head> Page, page 59!

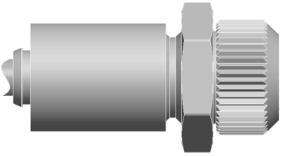

Figure 62: Sensing Head with Close Focus Lens (XXXMI3ACCFL)

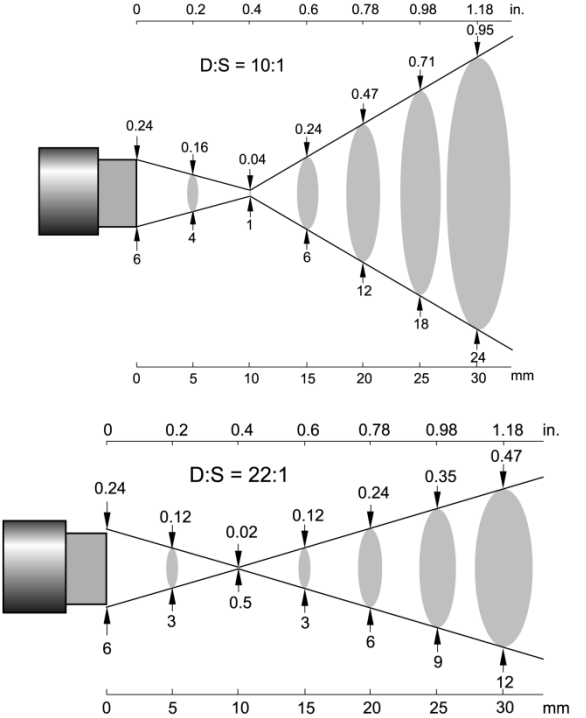

Figure 63: Spot Size Charts for Close Focus Lens

11.3 Accessories (1M, 2M Heads)

- Fixed Mounting Bracket (XXXMI3100FB)
- Adjustable Mounting Bracket (XXXMI3100ADJB)
- Air Purge Collar (XXXMI3100AP)
- Right Angle Mirror (XXXMI3100RAM)
- Protective Window (XXXMI3100PW)

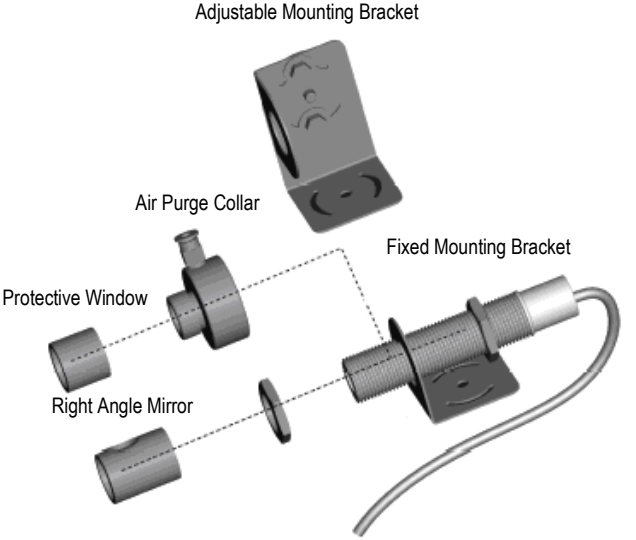

Figure 64: Overview of available accessories

11.3.1 Fixed Mounting Bracket

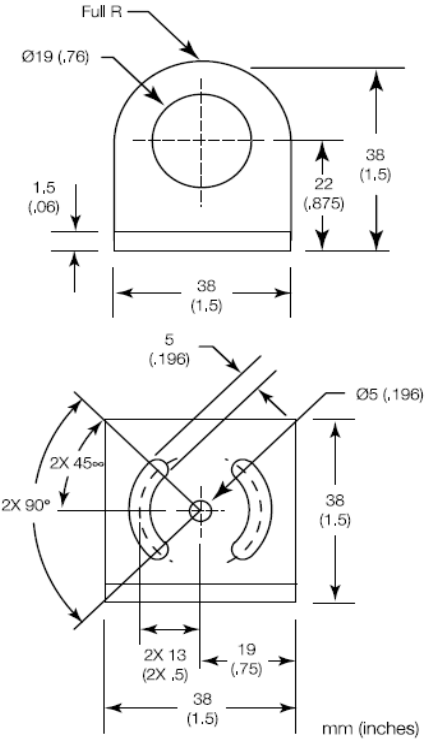

Figure 65: Dimensions of Fixed Mounting Bracket

11.3.2 Adjustable Mounting Bracket

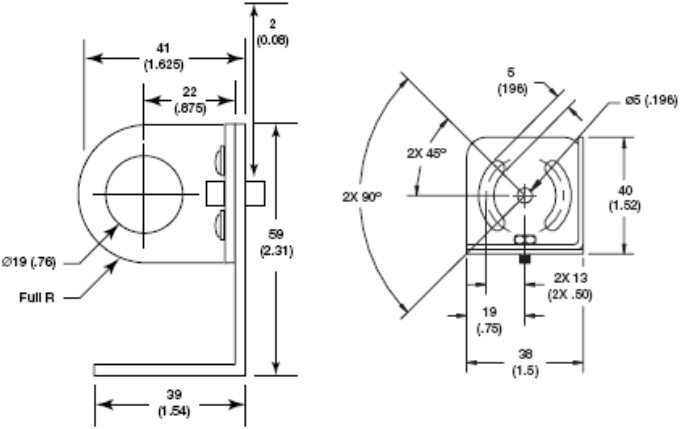

Figure 66: Dimensions of Adjustable Mounting Bracket

11.3.3 Air Purge Collar

The Air Purge Collar is used to keep dust, moisture, airborne particles, and vapors away from the lens. It can be mounted before or after the bracket. It has the push-in fitting. A 4 mm (0.16 in) outside diameter plastic tubing is recommended to connect the fitting. Air flows into the fitting and out the front aperture. The pressure of air should be 0.6 to 1 bar (8.7 to 15 PSI). Clean, oil free air is recommended.

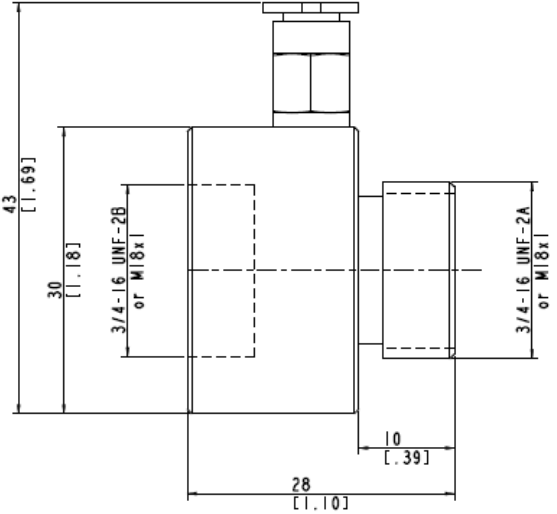

Figure 67: Dimensions of Air Purge Collar

11.3.4 Right Angle Mirror

The Right Angle Mirror is used to turn the field of view by 90° against the sensor axis. It is recommended when space limitations or excessive radiation do not allow for direct alignment of the sensor to the target. The mirror must be installed after the bracket and after the Air Purge Collar and screwed in fully. In dusty or contaminated environments, air purging is required to keep the mirror surface clean.

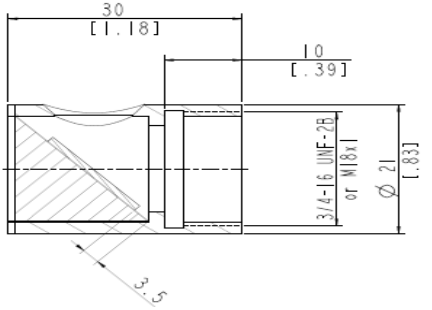

Figure 68: Dimension of Right Angle Mirror

When using the Right Angle Mirror, adjust the emissivity or transmissivity settings downward by 5%. For example, for an object with an emissivity of 0.65, you adjust the value down to 0.62. Or, you can keep the emissivity 0.65 and adjust the transmissivity from 1.0 to 0.95. This correction accounts for energy losses in the mirror.

11.3.5 Protective Window

Protective windows can be used to protect the sensing head from dust and other contamination. The protective window can be directly screwed onto the sensing head.
The following table provides an overview of the available windows.

Order number	Material	Transmission	T ambient
XXXMI3100PW	Fused Silica stainless steel	0.98 ±0.05 (for 1M, 2M models)	120°C (248°F)

Table 6: Available Protective Windows

For correct temperature readings, the transmission of the protective window must be set via the control panel in the communication box. See section 8.2 <Head> Page, page 59!

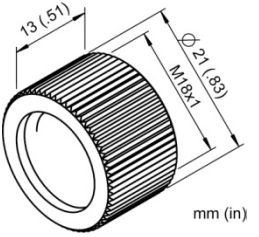

Figure 69: Protective Window (XXXMI3100PW)

12 Maintenance

Our sales representatives are always at your disposal for questions regarding application assistance, calibration, repair, and solutions to specific problems. Please contact your local sales representative, if you need assistance. In many cases, problems can be solved over the telephone. If you need to return equipment for servicing, calibration, or repair, please call our Service Department for authorization prior to return. Phone numbers are listed at the beginning of this document.

12.1 Troubleshooting Minor Problems

Symptom	Probable Cause	Solution
No output	No power to instrument	Check the power supply
Erroneous temperature	Faulty sensor cable	Verify cable continuity
Erroneous temperature	Field of view obstruction	Remove the obstruction
Erroneous temperature	Window lens	Clean the lens
Erroneous temperature	Wrong emissivity	Correct the setting
Temperature fluctuates	Wrong signal processing	Correct Peak/Valley Hold or Average settings
Temperature fluctuates	No ground for the head	Check wiring / grounding

Table 7: Troubleshooting

12.2 Fail-Safe Operation

The Fail-Safe system is designed to alert the operator and provide a safe output in case of any system failure. The sensor is designed to shutdown the process in the event of a set-up error, system error, or a failure in the sensor electronics.

The Fail-Safe circuit should never be relied on exclusively to protect critical processes. Other safety devices should also be used to supplement this function!

When an error or failure does occur, the display indicates the possible failure area, and the output circuits automatically adjust to their preset levels. See the following tables:

Symptom	0 to 5 V	0 to 10 V	0 to 20 mA	4 to 20 mA
Temperature over range*	5 V	10 V	21 to 24 mA	21 to 24 mA
Temperature under range*	0 V	0 V	0 mA	2 to 3 mA
Head ambient temperature out of range	5 V	10 V	21 to 24 mA	21 to 24 mA
Communication error between head and box	5 V	10 V	21 to 24 mA	21 to 24 mA

* related to zoomed temperature range

Table 8: Error Codes for Analog Output

Symptom	J	K	R	S
Temperature over range	> 1200°C (2192°F)	> 1372°C (2502°F)	> 1768°C (3214°F)	> 1768°C (3214°F)
Temperature under range	-210°C (-346°F)	-210°C (-346°F)	-50°C (-58°F)	-50°C (-58°F)
Head ambient temperature out of range	> 1200°C (2192°F)	> 1372°C (2502°F)	> 1768°C (3214°F)	> 1768°C (3214°F)

Table 9: Error Codes for Thermocouple Output TC

Output	Error Code Description
T---	Communication error between head and box
T>>>	Temperature over range
T<<<	Temperature under range

Table 10: Error Codes via Field Bus

Display	Error Code Description
“No sensor”	No sensing head detected
“Sensing head #n lost”	Communication error between head and box
“>”	Temperature over top range* e.g. “>600°C”
“<”	Temperature under bottom range* e.g. “<−40°C”

* related to full measurment range

Table 11: Error Codes for LCD Display

12.3 Cleaning the Lens

Keep the lens clean at all times. Care should be taken when cleaning the lens. To clean the window, do the following:

1. Lightly blow off loose particles with “canned” air (used for cleaning computer equipment) or a small squeeze bellows (used for cleaning camera lenses).
2. Gently brush off any remaining particles with a soft camel hair brush or a soft lens tissue (available from camera supply stores).
3. Clean remaining “dirt” using a cotton swab or soft lens tissue dampened in distilled water. Do not scratch the surface.

For finger prints or other grease, use any of the following:

- Denatured alcohol
- Ethanol
- Kodak lens cleaner

Apply one of the above to the lens. Wipe gently with a soft, clean cloth until you see colors on the surface, then allow to air dry. Do not wipe the surface dry, this may scratch the surface.
If silicones (used in hand creams) get on the window, gently wipe the surface with Hexane. Allow to air dry.

Do not use any ammonia or any cleaners containing ammonia to clean the lens. This may result in permanent damage to the lens’ surface!

12.4 Sensing Head Exchange

To exchange a sensing head, the following procedure is required:

1. Disconnect power to the box.
2. Disconnect all head wires from the box terminal.
3. Power the box.
4. The alarm indicator of the box starts to blink indicating a lost sensing head.
5. Press the button to navigate to the head page indicating a lost sensing head.
6. Decide whether you want to select:
   a) <Remove Yes>: to **remove** the head permanently from the box by loosing all head parameters (head address de-allocated for other heads, alarm condition is reset) – the next head connected later will be detected as a new head and automatically assigned to a free head address.
   or
   b) <Remove No>: to **keep** the head assigned to the box by saving all head parameters for a future use without the need to parameterize that head again (head address reserved for that individual head, alarm condition is kept) – the same head connected later will be detected as a known head by keeping the previous address.

13 DataTemp Multidrop Software

13.1 Software Features

DataTemp Multidrop DTMD provides sensor setup, remote monitoring, and simple data logging for analysis or to meet quality record-keeping requirements. Additional features configurable with DTMD Software:

- Eight-position "recipe" table that can be easily interfaced to an external control system
- External reset signal input FTC for signal processing
- External inputs FTC for analog emissivity adjustment or background radiation compensation
- Remote digital communication and control of up to 32 sensors in an RS485 multidrop configuration

For more detailed information, see the comprehensive help feature in the DTMD software.

13.2 PC Requirements

- PC with Windows 2000/XP/Vista/Win7, 64 MB RAM memory
- about 10 Mb free memory on the hard disc for program files
- USB port with recommended USB/RS485 adapter (available as accessory), see section 11.1.2 USB/RS485 Adapter, page 84.

13.3 USB Driver Installation

Before running the DTMD Software the installation of an adequate USB driver is required:

- Disconnect/reconnect the USB interface cable to the computer!
- Ignore the Windows Wizard <Found New Hardware>!
- Navigate manually to the dedicated MI3 driver „RaytekMIcomport.inf" on the support media and execute it.

It is strongly recommended to check the correct driver installation under the Windows Operating System <Start> <Settings> <Control Panel> <System> <Hardware> <Device Manager> <Ports (COM & LPT)>. Go there also to get the virtual COM port number for communicating with the DTMD Software.

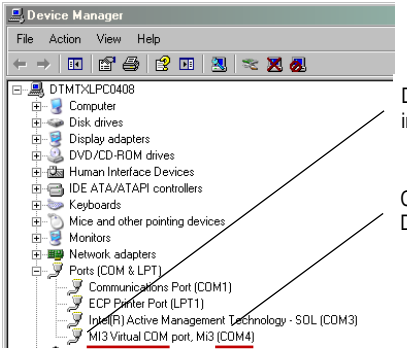

13.4 Software Launch

Make sure any sensor is turned on and the USB driver is installed before running DTMD software.
The Startup Wizard runs the first time you use the program. Please note:

- The wizard shows active COM ports only!
- The sensor requires the selection of <ASCII protocol>!
- The DTMD software communicates to Comm Boxes only! A multidrop installation is related to a network with multiple Comm Boxes and not to a multiple head system with one Comm box only!

14 Programming

This section explains the system's communication protocols. A protocol is the set of commands that defines all possible communications with the sensor. The commands are described along with their associated ASCII command characters and related message format information. Use them when writing custom programs for your applications or when communicating with your sensor using a terminal program.

14.1 ASCII Programming

14.1.1 Transfer Modes

Settings: 8 data bits, 1 stop bit, no parity, flow control: none (half duplex mode).

There are two possible transfer modes for the digital interface:

Poll Mode: By user-interface control, a parameter will be set or requested.

Burst Mode: A pre-defined data string ("burst string") will be transferred as fast as possible, as long as the burst mode is activated. The data will be transferred in one direction only, from the unit to the user interface.

V=P	"P" starts the Poll mode (allows to request or to set parameters)
V=B	"B" starts the Burst mode (data will be transferred as fast as possible; necessary: data string definition – "Burst string")
$=UTIE	"$" sets the parameter combination ("burst string") "U" unit (°C or °F) "T" temperature value "I" internal temperature of the sensing head

	"E" emissivity
?X$	gives the burst string parameters while in poll mode

Return from burst mode to poll mode:
If poll mode should activate while burst mode is still active, send a character and within the following few seconds the command V=P.

14.1.2 Command Structure

Requesting a parameter (Poll Mode)

?E<CR>	"?" is the command for "Request" "E" is the parameter requested <CR> (carriage return, 0Dh) is closing the request. **Remark:** It is possible to close with <CR> <LF>, 0Dh, 0Ah, but not necessary.

Setting a parameter (Poll Mode)
The parameter will be stored into the device EEPROM.

E=0.975<CR>	"E" is the parameter to be set "=" is the command for "set a parameter" "0.975" is the value for the parameter <CR> (carriage return, 0Dh) is closing the request **Remark:** It is possible to close with <CR> <LF>, 0Dh, 0Ah, but not necessary.

Setting a parameter without writing into the EEPROM (Poll Mode)
This function is for test purposes only.

E#0.975<CR>	"E" is the parameter to be set "#" is the command for "set parameter without writing into the EEPROM" "0.975" is the value for the parameter <CR> (carriage return, 0Dh) is closing the request. **Remark:** It is possible to close with <CR> <LF>, 0Dh, 0Ah, but not necessary.

Device response format:

!E0.975<CR><LF> "!" is the parameter for "Answer"
"E" is the parameter
"0.975" is the value for the parameter
<CR> <LF> (0Dh 0Ah) is closing the answer.

Error message

Syntax Error "" is the character for "Error"

14.1.3 Device Information

This information is factory installed, read only.

Command	Description	Answer (Example)
?HI	Device name of the Head	"HIMI3LTS22"
?HN	Serial Number of the Head	"HN98123"
?XU	Device name of the Box	"XUMI3"
?XV	Serial Number of the Box	"!XV0A0027"
?XH	Maximum Temp. Range: e.g. for LT head	"!XH0600.0"
?XB	Minimum Temp. Range: e.g. for LT head	"!XB-040.0"

Table 12: Device Information

14.1.4 Device Setup

14.1.4.1 Temperature Calculation

U=C unit for the temperature value

E=0.950 Emissivity setting (Caution: according to the settings for "ES", see section 14.1.4.2 Emissivity Setting and Alarm Setpoints page 118.)

XG=1.000 Setting for transmission

For the calculation of the temperature value, it is possible to set an offset (relative number to be added to the temperature value), and a gain value.

DG=1.0000 Gain adjustment for the temperature signal

DO=0 Offset adjustment for the temperature signal

If the ambient temperature is not requested by the internal head temperature, you must set the ambient temperature values, as follows:

A=250.0	Ambient temperature (example)
AC=1	Control ambient background temp. compensation

14.1.4.2 Temperature Pre-Processing

The samples from the AD converter can be processed before temperature calculation. The corresponding filter command is <FF>.

14.1.4.3 Emissivity Setting and Alarm Set points

The device allows three choices for the emissivity setting and two for the alarm output setting.

ES	**Selection of the emissivity setting.**
ES=1	Emissivity set by a constant number according to the „E“ command
ES=E	Emissivity set by a voltage on FTC1 (analog input)
ES=D	Emissivity set by the entries in a table (selected by digital inputs FTC1 – FTC3)
?CE	asks for the emissivity value that is actually used for temperature calculation

There are eight entries possible for emissivity setting ① and a related set point (threshold) ②. To be able to write or read these values, use the following commands:

EP=2	set pointer for table entry, e.g. to line 2 ③
EV=0.600	set the emissivity value for line 2 to 0.600 ④
SV=220.0	set the set point (threshold) for line 2 to 220.0 ⑤

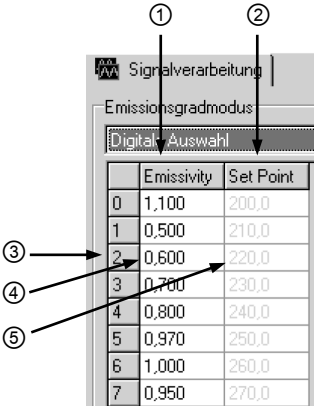

Figure 70: Table for Emissivity and Set Points

To activate these emissivity settings, you need to have the 3 external inputs (FTC) connected. According to the digital combination on the FTC wires, one of the table entries will be activated. See section 7.2 Emissivity Setting via Digital Selection page 50.

14.1.4.4 Post Processing

The following parameters can be set to determine the post processing mode. See section 8.5 Post Processing page 65.

P=5.0	peak hold, hold time: 5 s
F=12.5	valley hold, hold time: 12.5 s
G=10.0	averaging, average time (90%): 10 s
XY=3.0	advanced peak hold, hysteresis: 3 K
XY=-2.0	advanced valley hold, hysteresis: 2 K
	Advanced Peak/Valley Hold with Averaging:
C=250.0	threshold: 250°C
AA=15.0	averaging time (90%): 15 s

14.1.5 Dynamic Data

All temperature related information is calculated multiple times per second. To request the dynamic data, the following commands are available:

?T	target temperature
?I	internal temperature of the sensing head
?XJ	internal temperature of the electronics housing
?Q	energy value of the infrared temperature
?XT	trigger set point (active/inactive) for the FTC3 input

To check for resets (e.g. power shut down), use the command XI. Notice, after a reset, the unit is new initialized.

?XI	asks for the reset status
!XI0	no reset occurred
!XI1	a reset occurred, new initialization of the unit
XI=0	sets the reset status back to 0

14.1.6 Device Control

14.1.6.1 Output for the Target Temperature

The signal output can be set to 4 – 20 mA, 0 – 20 mA or V. If current output is activated, the output can provide a predefined current:

XO2O=4	mode to 4 – 20 mA for output 2

O2O=13.57	output of a constant current at 13.57 mA at output 2
O2O=60	switches back to the temperature controlled output

14.1.6.2 Analog Output, Scaling

According to the temperature range of the model, it is possible to set a maximum voltage/current value according to a temperature value (e.g., the maximum current 20 mA shall represent 200°C / 392°F). The same setting is possible for the minimum value.

H2O=500	the maximum current/voltage value for output 2 is set to 500°C
L2O=0	the minimum current/voltage value for output 2 is set to 0°C

Remark: You cannot set this value for thermocouple output. The minimum span between the maximum / minimum settings is 20 K.

14.1.6.3 Alarm Output

The alarm output (see section 6.4 Alarm Output RELAY, page 47) can be driven by two triggers:

- object temperature
- head ambient temperature

KH=off	no alarm control
KH=1	object temperature drives alarm control
KH=2	head ambient temperature drives alarm control

KB=0	relay contacts permanently open
KB=1	relay contacts permanently closed
KB=2	relay contacts normally open
KB=3	relay contacts normally closed
XS=125.3	threshold setting to 125.3°C (if U=C is set)

14.1.6.4 Factory default values

It is possible to reset the unit to the default values.

XF factory default values will be set

14.1.6.5 Lock Mode

The access to the unit is possible via serial interface (software) and via the direct user input (mode buttons, LCD display). It is possible to lock the button. This allows the change of parameters to the unit only via software.

J=L direct user access to button denied
J=U unlocking the button

Alternatively the unit can be unlocked by pressing the button and the button simultaneously for 3 seconds.

14.1.6.6 Mode Setting for the Digital Input FTC3

The digital input FTC3 (see section 7.4 Trigger and Hold Function page 53) can be used as follows:

XN=T FTC3 as trigger
XN=H FTC3 with hold function

14.1.6.7 Ambient Background Temperature Compensation

To compensate the ambient background temperature, the following modes are available:

AC=0 no compensation
AC=1 compensation with a constant temperature value set with command A.
AC=2 compensation with an external voltage signal at the analog input FTC2 (0 V – 5V corresponds to low end and high end of temperature range). Current ambient temperature is readable with command A.
Note: The mode AC = 2 does not function in case of setting the command ES = D!

For more information regarding the ambient background temperature compensation feature, see section 7.3 Ambient Background Temp. Compensation page 51.

14.1.7 Addressing of Multiple Heads

The communication boxes support up to 8 heads. To direct a command to one head among the 8 possible, it is necessary to "address" the head command. Therefore, a number between 1 and 8 is set prior to the head command.

Examples for the head command "Emissivity":

?2E	requests the emissivity for sensing head at address 2
2E=0.975	sets the emissivity to 0.975 for sensing head at address 2
!2E0.975	sensing head at address 2 confirms the emissivity setting

14.1.8 Addressing of Multiple Boxes

Up to 32 communication boxes can be connected within an RS485 network. To direct a command to one box among the 32 possible, it is necessary to „address" a command. Therefore, a 3-digit number is set prior the box command. The 3-digit number is determined between 001 and 032.

XA=024 will set address to 24 (box must not be in multidrop mode)

Changing an address:
(e.g. the address is changed from 17 to 24)

command	answer
„017?E"	„017E0.950"
„017XA=024"	"017XA024" setting of a new address
„024?E"	„024E0.950"

Note: A box with the address 000 is a single box and not in multidrop mode.

If a command is transferred, starting with the 3-digit number 000, all boxes (with addresses from 001 to 032) connected will get this command – without to send an answer.

command	answer
"024?E"	"024E0.950"
"000E=0.5"	will be executed from all units, no answer
"024?E"	"024E0.500"
"012?E"	"012E0.500"

14.1.9 Command Set

P ... Poll, B ... Burst, S ... Set, N ... Notification

n ... head number, v ... value, X ... uppercase letter

Description	Char	Format	P	B	S	N	Legal Values	Factory default	Head / Box
Poll parameter	?	?X	√				?T		
Set parameter	=	X=…			√		BR=115200		
Error message	*						*Syntax error		
Acknowledge message	!						!BR115200		
Burst string format	$	?$ or $=nT	√		√			TIXJXT	
Ambient background temp. compensation	A	nA float	√	√	√		°C/°F	23°C	H
Advanced hold with average	AA	nAA float	√	√	√		0 – 999.9 s	000.0s	H
Control ambient background temp. compensation	AC	nAC	√	√	√		0 – sensor temp. 1 – via number 2 – via ext. input	0	H

Description	Char	Format	P	B	S	N	Legal Values	Factory default	Head / Box
Baud rate RS485	BR	BR integer	√		√		9600, 19200 38400, 57600, 115200	9600	B
Advanced hold threshold	C	nC	√		√			300 °C/°F	H
Currently calculated emissivity	CE	nCE	√				0.1 - 1.1		H
Current calculation setpoint/ relay function	CS	nCS	√						H
Communication module	CM	?CM	√				0 – no module 1 – RS485		B
Sensor Gain	DG	nDG float					0.8…1.2	1.0	H
Sensor Offset	DO	nDO float					-200°C…+200°C	0°C	H
Delete Sensor	DH	nDH							B
Box special	DS	string	√		√		e.g. !DSRAY (read only)	Set at production	B
Emissivity internal	E	nE float	√	√	√		0.1 - 1.1	0.950	H
Status Code	EC	EC 16 bit hex	√				hex value of Status Code[1]		B
External module	EM	?EM	√				0 – no module 2 – 2 modules 4 – 4 modules 8 – 8 modules		B

[1] Box Status Codes (read only):

Self-test error	BIT0
Box ambient temperature out of range	BIT1
Sensing head communication error	BIT2
Parameter error	BIT3
Register write error	BIT4

Description	Char	Format	P	B	S	N	Legal Values	Factory default	Head / Box
Presel. Emissivity Pointer	EP	nEP integer					0 - 7	0	H
Emissivity Source	ES	nES integer	√		√		I = Emissivity from Internal (by command) E = Emissivity from External analog input (0V—5V) D = digital selected FTC1-3	I	H
Presel. Emissivity Value	EV	nEV float	√		√		0.1 - 1.1		H
Valley hold time[1]	F	nF float	√	√	√	√	0.0 - 998.9s (999 = ∞)	0.0 s	H
Flicker Filter	FF	nFF integer					0…32768	0 (LT, G5) 3000 (1M, 2M)	H
Average time[2]	G	nG float	√	√	√	√	0 – 999.0 secs	0.0 s	H
Head Address	HA	nHA	√				1 – 9		B
Connected heads	HC	string	√				e.g. !HC – no heads !HC1 2 3 7 8		B
Registered heads	HCR	string	√		√		e.g. !HCR – no heads !HCR1 2 3 7 8 HCR=0 –> new registration		B
Head Status Code	HEC	nHEC 16 bit hex	√				hex value of Status Code[3]		H

[1] setting average / peak / valley / advanced hold cancels all other hold modes
[2] setting average / peak / valley / advanced hold cancels all other hold modes
[3] Head Status Codes (read only):

Temperature unit	BIT0 // 0 = °C, 1 = °F
Object temperature out of range	BIT1 // 1 = out of range
Ambient temperature out of range	BIT2 // 1 = out of range
Parameter error for a command	BIT3 // 1 = error

Description	Char	Format	P	B	S	N	Legal Values	Factory default	Head / Box
Head identification	HI	?nHI string	√		(√)		e.g. !7HIMIXLTS22	set at production	H
Top temperature value of output 1	H1O (H)	float	√		√	√	H1O= –40.0 or H= –40.0	500°C	B
Top temperature value of output 2	H2O	float	√		√	√	H2O= –40.0	500°C	B
Laser Control	HL	nHL integer	√		√	√	0=off, 1=on, 2=flash, 3=external	0	H
Head serial number	HN	?nHN integer	√		√		e.g. !nHN98123	set at production	H
Head special	HS	?nHS string	√		√		e.g. !99HSRAY	Set at production	H
Head Firmware Revision	HV	?nHV	√				e.g. 1.01	Set in FW	H
Restore Head Factory defaults	HXF	nHXF			√				H
Head ambient	I	?nI float	√	√			answer !nI=99.9		H
Switch panel lock	J	X	√		√	√	L = locked U = unlocked	unlocked	B
Relay alarm output control depreciated for MI3 (use the commands KB and KH instead of)	K	K integer	√		√		0 = off 1 = on 2 = Target norm. open 3 = Target norm. closed 4 = Intern norm. open 5 = Intern norm. closed	2	H

Register write error	BIT4 // 1 = error
Self-test error	BIT5 // 1 = error
{reserved}	BIT6
Ambient temperature compensation	BIT7 // 0 = off, 1 = on

Description	Char	Format	P	B	S	N	Legal Values	Factory default	Head / Box
Relay alarm output control	KB	KB integer	√		√		0 = off 1 = on 2 = norm. open 3 = norm. closed	2	B
Relay alarm output control	KH	nKH integer	√		√		0 = off 1 = target temp. 2 = head ambient	1	H
Bottom temperature value of output 1	L1O (L)	float	√		√	√	L1O= –40.0 or L= –40.0	0°C	B
Bottom temperature value of output 2	L2O	float	√		√	√	L2O= –40.0	0°C	B
Output 1 source	O1O (O)	O1O=1T float, or nT, or nI	√		√		v – float value n – head number if v = 60 – controlled by head 1(O1O=1T)	O1O=0	B
Output 2 source	O2O	O2O=1I float, or nT, or nI	√		√		v – float value n – head number if v = 60 – controlled by head 1(O2O=1I)	O2O=0	B
Peak hold time[1]	P	nP float	√	√	√	√	0.0 - 998.9s (999 = ∞)	0.0s	H
Power / AD value	Q	?nQ							H
Presel. Setpoint	SV	nSV float						500°C	H
Target temperature	T	?nT float	√	√			answer !nT=99.9		H
Get Analog Input 1	TV1I	?TV1I					0 – 5V		B
Get Analog Input 2	TV2I	?TV2I					0 – 5V		B
Temperature Unit	U	X	√	√	√	√	C / F	C	B/H

[1] setting average / peak / valley / advanced hold cancels all other hold modes

Description	Char	Format	P	B	S	N	Legal Values	Factory default	Head / Box
Poll / Burst mode	V	V=P	√		√		P=poll B=burst	poll mode	B
Burst string contents	X$	?X$	√						B
Multidrop Address	XA	0nn	√		√	√	000 – 032 (000 --> single unit mode)	000	B
Device Bottom range limit	XB	?nXB float	√		√		answer !nXB=10.0		H
Restore Box Factory defaults	XF				√			except address	B
Transmission	XG	float	√	√	√		0.1 – 1.0	1.0	H
Device High range limit	XH	?nXH float	√		√		read only		H
Sensor initialization	XI						1 after reset 0 if XI=0	1	B
Box Temperature	XJ	float					(°C/°F)		B
FTC3 trigger/hold	XN	nXN					T = trigger, H = hold	T	H
analog Output 1 mode	XO1O (XO)	XO1O=v (XO=v)	√		√		5 – TCJ 6 – TCK 7– TCR 8 – TCS 9 – 0...5 V 10 – 0...10 V 99 – disable (tristate)	XO1O=9	B
analog Output 2 mode	XO2O	XO2O=v	√		√		0 – 0...20 mA 4 – 4...20 mA 9 – 0...5 V 10 – 0...10 V 99 – disable (tristate)	XO2O=4	B
Box Firmware Revision	XR	?XR	√				e.g. 1.01	Set in FW	B
Setpoint relay function	XS	nXS float	√		√		°C/°F	500°C	H
Trigger	XT	?XT	√	√		√	0 = inactive, 1 = active	0	B

Description	Char	Format	P	B	S	N	Legal Values	Factory default	Head / Box
Unit identification	XU	?XU	√				e.g. !XUMI3COMM	set at production	
Serial number	XV	?XV	√				e.g. !XV98123	set at production	B
Advanced hold hysterese	XY	nnnn	√		√				H

Table 13: Command Set

14.2 Profibus Programming

14.2.1 Parameter Data

Byte	Address without offset	Description	Format	Range
0 to 6		Fix		
7		DP-V1 Status1		
8		DP-V1 Status2		
9		DP-V1 Status3		
10	3	Temp. unit	67=°C, 70=°F	67 or 70
11	4	Reserved		
12, 13	5	Bottom temp. of output 1	in 0.1°C /°F	
14, 15	7	Top temp. of output 1	in 0.1°C /°F	
16, 17	9	Bottom temp. of output 2	in 0.1°C /°F	
18, 19	11	Top temp. of output 2	in 0.1°C /°F	
20	13	Source (head) for output-1	head number	1…8
21	14	Type of source for output-1	73 = I (internal temp.) 84 = T (object temp.)	73 or 84
22	15	Analog output mode 1	5 = TCJ 6 = TCK 7 = TCR 8 = TCS 9 = 0…5V 10 = 0…10V 99 = tristate (disabled)	5…10, 99 default: 9
23	16	Source (head) for output-2	head number	1…8
24	17	Type of source for output-2	73 = I (internal temp.), 84 = T (object temp.)	73 or 84
25	18	Analog output mode 2	0 = 0…20mA 4 = 4…20mA 9 = 0…5V 10 = 0…10V 99 = tristate (disabled)	0, 4, 9, 10, 99 default: 4
26…39		reserved		
40…43		reserved		
44, 45	37	Emissivity Head_1	* 1000 (0.9 → 900)	100 … 1100
46, 47	39	Transmissivity Head_1	* 1000 (1.0 → 1000)	100 … 1000
48, 49	41	Averaging time Head_1	* 0.1s (1s → 10)	0 …9990
50, 51	43	Peak hold time Head_1	* 0.1s (1s → 10)	0 …9990
52, 53	45	Valley hold time Head_1	* 0.1s (1s → 10)	0 …9990

Byte	Address without offset	Description	Format	Range
54, 55	47	Ambient temp. Head_1	in °C /°F	dev. range min.. max
56, 57	49	Setpoint relay Head_1	in °C /°F	dev. range min.. max
58	51	Relay alarm output control Head_1	0 = off 1 = target temp. 2 = internal temp.	0, 1 or 2
59	52	Laser Head_1	0 = off, 1 = on, 2 = flashing	0 or 1
60…63		reserved, for future consideration		
64 …		Head_2		
84 …		Head_3		
104 …		Head_4		
124 …		Head_5		
144 …		Head_6		
164 …		Head_7		
184 …		Head_8		

14.2.2 Input Data

The input data consists of modules that have a fixed position in the data field. There are two types of modules: <Box data> and <Data for one head>.

- Module **<Box data>** consists of one byte in which bit0 gives the trigger state (configuration 0x12).
- Module **<Head data>** consists of two bytes object temperature and two bytes head temperature (configuration 0x51). The format is 1/10 °C/°F.

Address	Description
0	Box data: Trigger state
1, 2	Box data: Internal temperature
3, 4	Head 1: Object temperature
5, 6	Head 1: Head temperature
7, 8	Head 2: Object temperature
9, 10	Head 2: Head temperature
11, 12	Head 3: Object temperature
13, 14	Head 3: Head temperature
15, 16	Head 4: Object temperature
17, 18	Head 4: Head temperature
19, 20	Head 5: Object temperature
21, 22	Head 5: Head temperature
23, 24	Head 6: Object temperature
25, 26	Head 6: Head temperature
27, 28	Head 7: Object temperature
29, 30	Head 7: Head temperature
31, 32	Head 8: Object temperature
33, 34	Head 8: Head temperature

The slave expects one <Box data> module configured at the first position, followed by <Head data> modules. Any other configuration will cause a configuration error.
The input data length gets calculated from the count of configured modules. So, if only one head is connected and configured then only seven bytes are transferred. If all heads (maximal eight) are connected and configured then 35 bytes are transferred. If only one head is connected but eight heads are configured then also 35 bytes are transferred.

14.2.3 Output Data

The device does not have output data in the original meaning. But the output data may be used to change the initialization of the device (which was set once at start-up) when the bus is in data exchange mode.
To do so the following structure is defined:

Address	Description
0	Type of parameter
1, 2	Parameter for Head 1
3, 4	Parameter for Head 2
5, 6	Parameter for Head 3
7, 8	Parameter for Head 4
9, 10	Parameter for Head 5
11, 12	Parameter for Head 6
13, 14	Parameter for Head 7
15, 16	Parameter for Head 8

The <Type of parameter> comes with the format described in section 14.2.1 Parameter Data, page 131, and can be set to the following parameters:

Number of type	Description
0	do not change anything
1	emissivity
2	laser
3	ambient temperature (ambient temperature compensation)
4	averaging time
5	peak hold time
6	valley hold time
7	set point for the relay

If <Type of parameter> is set to 0 then the output data gets ignored. So it should be set to 0 as default.

Attention: You should be aware that always all heads are updated! So you have to set all eight (or as much as heads are connected) parameters to the correct value!

14.2.4 Diagnose Data

The device uses the first 32 bytes of the Identifier Related Diagnosis. The first 6 bytes consist of Standard Diagnosis dedicated to bus parameters. In this field byte 4 and 5 give the unit identifier (0D36 in our case).

Byte	Description
6	size of the diagnosis
7…9	reserved
10 (0x0A)	highest address of the connected heads → up to which index the user data is valid
11 (0x0B)	box error code
12 … 22 (0x0C …16)	last MI3-command which created an error as answer; ASCII code
23 (0x17)	head_1 error code
24 (0x18)	head_2 error code
25 (0x19)	head_3 error code
26 (0x1A)	head_4 error code
27 (0x1B)	head_5 error code
28 (0x1C)	head_6 error code
29 (0x1D)	head_7 error code
30 (0x1E)	head_8 error code

Table 14: Diagnose Data

Bit	Description
0	Self-test error
1	Box ambient temperature out of range
2	Sensing head communication error
3	Parameter error
4	Register write error

Table 15: Error Bits of Box Diagnose

Bit	Description
0	Object temperature out of range
1	Ambient (internal) temperature out of range
2	Parameter error
3	Register write error
4	Self-test error
5	reserved
6	Head registered but not connected → cable break?

Table 16: Error Bits of Head Diagnose

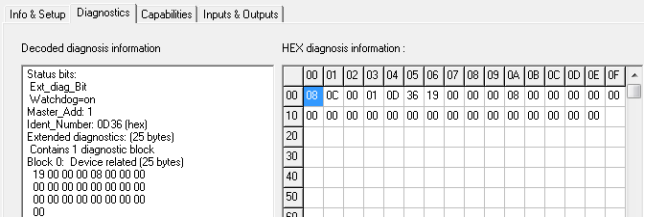

Figure 71: Diagnose Data without Errors

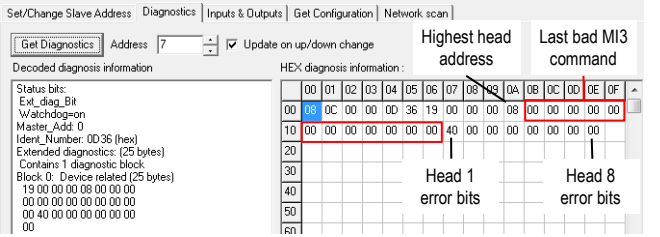

Figure 72: Diagnose Data with Error "Cable Break at Head 1"

14.3 Modbus Programming

14.3.1 Supported Functions

Function code	Modbus Function	Description
01	Read Coils	Read n bits
02	Read Discrete Inputs	Read n bits
03	Read Holding Registers	Read n 16 bit words
04	Read Input Registers	Read n 16 bit words
06	Write Single Register	Write a 16 bit word
16	Write Multiple Registers	Write n 16 bit words

14.3.2 Parameter Data

32 bit registers are transmitted in full Big-Endian mode, meaning most significant word is transmitted first, least significant word is transmitted last. The byte order within a word is Big-Endian as well.
While some registers hold integer values, there are some holding floating points. The interchange formats of the IEEE-754 standard for Floating-Point Arithmetic is used for representing floating points.
The following table lists all parameters, its content, their formats and usage.

14.3.2.1 Box Parameter

<k> … number of output channel, depending on the number of physically installed output channels of the Comm Box.

Items (registers, discretes or coils) are addressed starting at zero. Therefore items numbered 1-10000 are addressed as 0-9999.

Start address	Size [bits]	Modbus Access	Data Type	Content	Values	MI3[M] command
1	16	input register	short	error code for last request	0: no error 1: value out of range 2: illegal head number 3: illegal analog output number 4: illegal output mode 5: output disabled error 99: unspecified error	-
10	64	input register	hex	Serial number	e.g. 98123	XV
20	64	input register	string	Unit identification	e.g. MI3COMM	XU
30	64	input register	string	Box Firmware Revision	e.g. 2.10	XR
40	16	input register	short	Modbus slave address	1 .. 247	XA
50	32	input register	string	Box special	e.g. RAY, LAS	DS
60	32	holding register	integer	Baud rate RS485	9600, 19200, 38400, 57600, 115200	BR
70	16	holding register	char	Temperature Unit	0x43 ('C'), 0x46 ('F')	U
80	32	input register	float	Box Temperature		XJ
90	16	holding register	short	Switch panel lock	0: unlocked, 1: locked	J
100	8	discretes input	bit field	Get connected heads	bit 0: head 1 .. bit 7: head 8 bit high: head connected bit low: head disconnected	HC

Start address	Size [bits]	Modbus Access	Data Type	Content	Values	MI3[M] command
110	8	discretes input	bit field	Get registred heads	bit 0: head 1 .. bit 7: head 8 bit high: head registered bit low: head not registered	HCR
120	16	holding register	short	Laser control (only with laser)	0: off, 1: on	XL
130	16	holding register	short	Relay alarm output control	0: off 1: on 2: norm. open 3: norm. closed	KB
410	32	input register	float	ana. input 1 value	0 .. 5 V	TV1I
420	32	input register	float	ana. input 2 value	0 .. 5 V	TV2I
430	16	input register	short	Trigger	0: off 1: on	XT
5<k>0	16	holding register	short	ana. output k mode	5: TCJ 6: TCK 7: TCR 8: TCS 9: 0...5 V 10: 0...10 V 99: disable (tristate)	XO<k>O
5<k>1	16	holding register	short	ana. output k source	head number or 0: fixed value from 5<k>3	O<k>O
5<k>2	16	holding register	short	ana. output k source parameter	1: internal temp. of 5<k>1 2: object temp. of 5<k>1	O<k>O
5<k>3	32	holding register	float	ana. output k fixed temp. value	value within range set in address 5<k>0	-
5<k>5	32	holding register	float	ana. output k bottom temp. value	device bottom temp. .. device top temp.	L<k>O
5<k>7	32	holding register	float	ana. output k top temp. value	device bottom temp. .. device top temp.	H<k>O

14.3.2.2 Head Parameter

<n> … head number, depending on the registered heads

Starting address	Size [bits]	Modbus Access	Data Type	Content	Values	MI3[M] command
<n>005	8	discretes input	bit field	Head Status	bit0: Temperature Unit (0: deg. C, 1: deg. F) bit1: Object temperature out of range bit2: Ambient temperature out of range bit3: Parameter error bit4: Register write error bit5: Self-test error bit7: Background temp. compensation (0: off, 1: on)	HEC
<n>010	64	input register	hex	Head serial number	e.g. 10C02752	HN
<n>020	64	input register	string	Head identification	e.g. "MI310LTS"	HI
<n>030	64	input register	string	Firmware Rev. Head	e.g. 2.10	HV
<n>040	16	input register	short	Head Address	1 .. 9	HA
<n>050	32	input register	string	Head special	e.g. !99HSRAY (read only)	HS
<n>060	32	input register	float	Device Bottom range	-40 .. 1300 [°C]	XB
<n>070	32	input register	float	Device High range	-40 .. 1300 [°C]	XH
<n>080	32	input register	float	Target temperature	number within range <n>060 .. <n>070	T
<n>090	32	input register	float	internal sensor temp.		I
<n>100	32	holding register	float	Ambient background temp. comp.		A
<n>110	32	holding register	float	Advanced hold with average	0 .. 999.9 [s]	AA

Starting address	Size [bits]	Modbus Access	Data Type	Content	Values	MI3[M] command
<n>120	16	holding register	short	Control ambient background temp. comp.	0: sensor temp. 1: via number 2: via ext. input	AC
<n>130	16	holding register	short	Laser control (only with laser device)	0: OFF, 1: ON	HL
<n>140	16	holding register	short	Relay alarm output control	0: off 1: Target 2: Ambient	KH
<n>150	32	holding register	float	Advanced hold threshold	number within range <n>060 .. <n>070	C
<n>160	32	input register	float	Currently calculated emissivity	0.1 .. 1.1	CE
<n>170	32	input register	float	Current calculation setpoint / relay function	number within range <n>060 .. <n>070	CS
<n>180	32	holding register	float	Sensor Gain	0.8 .. 1.2	DG
<n>190	32	holding register	float	Sensor Offset	-200 C .. +200 C	DO
<n>200	32	holding register	float	Emissivity internal	0.1 .. 1.1	E
<n>210	16	holding register	short	Presel. Emissivity Pointer	0 .. 7	EP
<n>220	16	holding register	char	Emissivity Source	I: internal command E: ext. input (0V .. 5V) D: digital selected FTC1-3	ES
<n>230	32	holding register	float	Presel. Emissivity	0.1 .. 1.1	EV
<n>240	32	holding register	float	Valley hold time	0.0 .. 998.9s (999: infinite)	F
<n>250	32	holding register	float	Average time	0.0 .. 999.0 [seconds]	G
<n>260	32	holding register	float	Peak hold time	0.0 .. 998.9 [seconds] (999: infinite)	P
<n>270	32	input register	integer	Power / AD value		Q

Starting address	Size [bits]	Modbus Access	Data Type	Content	Values	MI3[M] command
<n>280	32	holding register	float	Presel. Setpoint		SV
<n>290	32	holding register	float	Transmissivity	0.1 .. 1.0	XG
<n>300	16	holding register	short	FTC3 trigger/hold	1: trigger, 2: hold	XN
<n>310	32	holding register	float	Setpoint relay function	number within range <n>060 .. <n>070	XS
<n>320	32	holding register	float	Adv. hold hysteresis		XY

15 Appendix

15.1 Determination of Emissivity

Emissivity is a measure of an object's ability to absorb and emit infrared energy. It can have a value between 0 and 1.0. For example a mirror has an emissivity of < 0.1, while the so-called "Blackbody" reaches an emissivity value of 1.0. If a higher than actual emissivity value is set, the output will read low, provided the target temperature is above its ambient temperature. For example, if you have set 0.95 and the actual emissivity is 0.9, the temperature reading will be lower than the true temperature.
An object's emissivity can be determined by one of the following methods:

1. Determine the actual temperature of the material using an RTD (PT100), a thermocouple, or any other suitable contact temperature method. Next, measure the object's temperature and adjust emissivity setting until the correct temperature value is reached. This is the correct emissivity for the measured material.
2. For relatively low temperatures (up to 260°C / 500°F) place a plastic sticker (e.g. XXXRPMACED) on the object to be measured. This sticker should be large enough to cover the target spot. Next, measure the sticker's temperature using an emissivity setting of 0.95. Finally, measure the temperature of an adjacent area on the object and adjust the emissivity setting until the same temperature is reached. This is the correct emissivity for the measured material.
3. If possible, apply flat black paint to a portion of the surface of the object. The emissivity of the paint is 0.95. Next, measure the temperature of the painted area using an emissivity setting of 0.95. Finally, measure the temperature of an adjacent area on the object and adjust the emissivity until the same temperature is reached. This is the correct emissivity for the measured material.

15.2 Typical Emissivity Values

The following table provides a brief reference guide for determining emissivity and can be used when one of the above methods is not practical. Emissivity values shown in the table are only approximate, since several parameters may affect the emissivity of a material. These include the following:

1. Temperature
2. Angle of measurement
3. Geometry (plane, concave, convex)
4. Thickness
5. Surface quality (polished, rough, oxidized, sandblasted)
6. Spectral range of measurement
7. Transmission (e.g. thin films plastics)

To optimize surface temperature measurements, consider the following guidelines:

- Determine the object's emissivity using the instrument which is also to be used for temperature measurements.
- Avoid reflections by shielding the object from surrounding temperature sources.
- For higher temperature objects, use instruments with the shortest wavelength possible.
- For translucent materials such as plastic foils or glass, assure that the background is uniform and lower in temperature than the object.
- Mount the instrument perpendicular to the surface, if possible. In all cases, do not exceed angles more than 30° from incidence.

METALS

Material	Emissivity		
	3.9 µm	5 µm	8 – 14 µm
Aluminum			
Unoxidized	0.02-0.2	0.02-0.2	0.02-0.1
Oxidized	0.2-0.4	0.2-0.4	0.2-0.4
Alloy A3003, Oxidized	0.4	0.4	0.3
Roughened	0.1-0.4	0.1-0.4	0.1-0.3
Polished	0.02-0.1	0.02-0.1	0.02-0.1
Brass			
Polished	0.01-0.05	0.01-0.05	0.01-0.05
Burnished	0.3	0.3	0.3
Oxidized	0.5	0.5	0.5
Chromium	0.03-0.3	0.03-0.3	0.02-0.2
Copper			
Polished	0.03	0.03	0.03
Roughened	0.05-0.15	0.05-0.15	0.05-0.1
Oxidized	0.5-0.8	0.5-0.8	0.4-0.8
Gold	0.01-0.1	0.01-0.1	0.01-0.1
Haynes			
Alloy	0.3-0.8	0.3-0.8	0.3-0.8
Inconel			
Oxidized	0.6-0.9	0.6-0.9	0.7-0.95
Sandblasted	0.3-0.6	0.3-0.6	0.3-0.6
Electropolished	0.15	0.15	0.15
Iron			
Oxidized	0.6-0.9	0.6-0.9	0.5-0.9
Unoxidized	0.05-0.25	0.05-0.25	0.05-0.2
Rusted	0.5-0.8	0.5-0.8	0.5-0.7
Molten	—	—	—
Iron, Cast			
Oxidized	0.65-0.95	0.65-0.95	0.6-0.95
Unoxidized	0.25	0.25	0.2
Molten	0.2-0.3	0.2-0.3	0.2-0.3
Iron, Wrought			
Dull	0.9	0.9	0.9
Lead			

Polished	0.05-0.2	0.05-0.2	0.05-0.1
Rough	0.4	0.4	0.4
Oxidized	0.2-0.7	0.2-0.7	0.2-0.6
Magnesium	0.03-0.15	0.03-0.15	0.02-0.1
Mercury	0.05-0.15	0.05-0.15	0.05-0.15
Molybdenum			
Oxidized	0.3-0.7	0.3-0.7	0.2-0.6
Unoxidized	0.1-0.15	0.1-0.15	0.1
Monel (Ni-Cu)	0.1-0.5	0.1-0.5	0.1-0.14
Nickel			
Oxidized	0.3-0.6	0.3-0.6	0.2-0.5
Electrolytic	0.1-0.15	0.1-0.15	0.05-0.15
Platinum			
Black	0.9	0.9	0.9
Silver	0.02	0.02	0.02
Steel			
Cold-Rolled	0.8-0.9	0.8-0.9	0.7-0.9
Ground Sheet	0.5-0.7	0.5-0.7	0.4-0.6
Polished Sheet	0.1	0.1	0.1
Molten	0.1-0.2	0.1-0.2	—
Oxidized	0.7-0.9	0.7-0.9	0.7-0.9
Stainless	0.15-0.8	0.15-0.8	0.1-0.8
Tin (Unoxidized)	0.05	0.05	0.05
Titanium			
Polished	0.1-0.3	0.1-0.3	0.05-0.2
Oxidized	0.5-0.7	0.5-0.7	0.5-0.6
Tungsten	0.05-0.5	0.05-0.5	0.03
Polished	0.05-0.25	0.05-0.25	0.03-0.1
Zinc			
Oxidized	0.1	0.1	0.1
Polished	0.03	0.03	0.02

Tab. 17: Typical Emissivity Values for Metals

	NON-METALS	
Material	**Emissivity**	
3.9 µm	**5 µm**	**8 – 14 µm**
Asbestos	0.9	0.95
Asphalt	0.95	0.95
Basalt	0.7	0.7
Carbon		
Unoxidized	0.8-0.9	0.8-0.9
Graphite	0.7-0.9	0.7-0.8
Carborundum	0.9	0.9
Ceramic	0.8-0.95	0.95
Clay	0.85-0.95	0.95
Concrete	0.9	0.95
Cloth	0.95	0.95
Glass		
Plate	0.98	0.85
"Gob"	0.9	—
Gravel	0.95	0.95
Gypsum	0.4-0.97	0.8-0.95
Ice	—	0.98
Limestone	0.4-0.98	0.98
Paint (non-al.)	—	0.9-0.95
Paper (any color)	0.95	0.95
Plastic, greater than 500 µm (0.02 in) thickness	0.95	0.95
Rubber	0.9	0.95
Sand	0.9	0.9
Snow	—	0.9
Soil	—	0.9-0.98
Water	—	0.93
Wood, Natural	0.9-0.95	0.9-0.95

Tab. 18: Typical Emissivity Values for Non-Metals

Notes